

SBS-COMPLIANT GAS GAUGE IC FOR USE WITH THE bq29311

FEATURES

- **Provides Accurate Measurement of Available Charge in Li-Ion and Li-Polymer Batteries**
- **Supports the Smart Battery Specification (SBS) V1.1**
- **Works With the TI bq29311 Analog Front End (AFE) Protection IC to Provide Complete Pack Electronics for 10.8-V or 14.4-V Battery Packs With Few External Components**
- **Based on a Powerful Low-Power RISC CPU Core With High-Performance Peripherals**
- **Integrated Flash Memory Eliminates the Need for External Configuration EEPROM**
- **Measures Charge Flow Using a High Resolution 16-Bit Integrating Converter**
  - **Better Than 3-nVh of Resolution**
  - **Self-Calibrating**
  - **Offset Error Less Than 1-μV**
- **Uses 16-Bit Delta Sigma Converter for Accurate Voltage and Temperature Measurements**
- **Programmable Cell Modeling for Maximum Battery Fuel Gauge Accuracy**
- **Drives 3-, 4-, or 5-Segment LED Display for Remaining Capacity Indication**
- **38-Pin TSSOP (DBT)**

APPLICATIONS

- **Notebook PCs**
- **Medical and Test Equipment**
- **Portable Instrumentation**

DESCRIPTION

The bq2083−V1P2 SBS-compliant gas gauge IC for battery pack or in-system installation maintains an accurate record of available charge in Li-ion or Li-polymer batteries. The bq2083−V1P2 monitors capacity and other critical parameters of the battery pack and reports the information to the system host controller over a serial communication bus. It is designed to work with the bq29311 analog front-end (AFE) protection IC to maximize functionality and safety and minimize component count and cost in smart battery circuits. Using information from the bq2083−V1P2, the host controller can manage remaining battery power to extend the system run time as much as possible.

BLOCK DIAGRAM

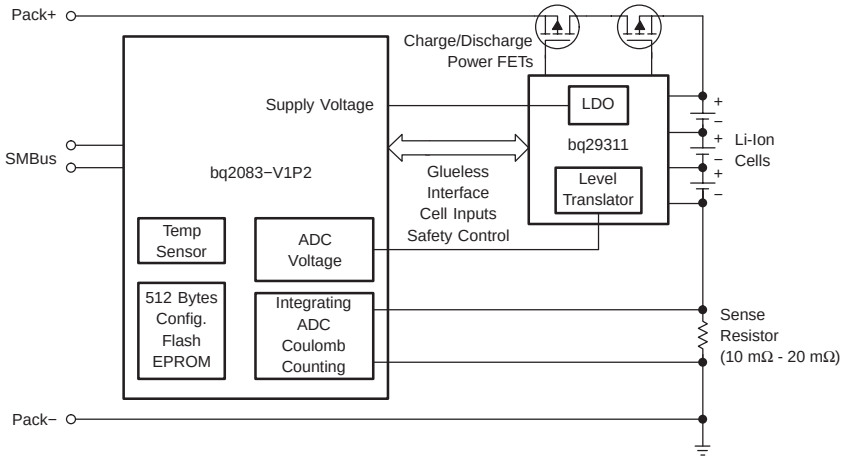

Please be aware that an important notice concerning availability, standard warranty, and use in critical applications of Texas Instruments semiconductor products and disclaimers thereto appears at the end of this data sheet.

PRODUCTION DATA information is current as of publication date. Products conform to specifications per the terms of Texas Instruments standard warranty. Production processing does not necessarily include testing of all parameters.

Copyright © 2003, Texas Instruments Incorporated

DESCRIPTION (CONTINUED)

The bq2083−V1P2 uses an integrating converter with continuous sampling for the measurement of battery charge and discharge currents. Optimized for coulomb counting in portable applications, the self-calibrating integrating converter has a resolution better than 3-nVh and an offset measurement error of less than 1-μV (typical). For voltage and temperature reporting, the bq2083−V1P2 uses a 16-bit A-to-D converter. In conjunction with the bq29311, the onboard ADC also monitors individual cell voltages in a battery pack and allows the bq2083−V1P2 to generate the control signals necessary to implement the cell balancing and the required safety protection for Li-ion and Li-polymer battery chemistries.

The bq2083−V1P2 supports the Smart Battery Data (SBData) commands and charge-control functions. It communicates data using the System Management Bus (SMBus) 2-wire protocol. The data available include the battery's remaining capacity, temperature, voltage, current, and remaining run-time predictions. The bq2083−V1P2 provides LED drivers and a push-button input to depict remaining battery capacity from full to empty in 20%, 25%, or 33% increments with a 3-, 4-, or 5-segment display.

The bq2083−V1P2 contains 512 bytes of internal data flash memory, which store configuration information. The information includes nominal capacity and voltage, self-discharge rate, rate compensation factors, and other programmable cell-modeling factors used to accurately adjust remaining capacity for use-conditions based on time, rate, and temperature. The bq2083−V1P2 also automatically calibrates or learns the true battery capacity in the course of a discharge cycle from programmable near full to near empty levels.

The bq29311 AFE protection IC provides power to the bq2083−V1P2 from a 3 or 4 series Li-ion cell stack, eliminating the need for an external regulator circuit.

TSSOP PACKAGE
(TOP VIEW)

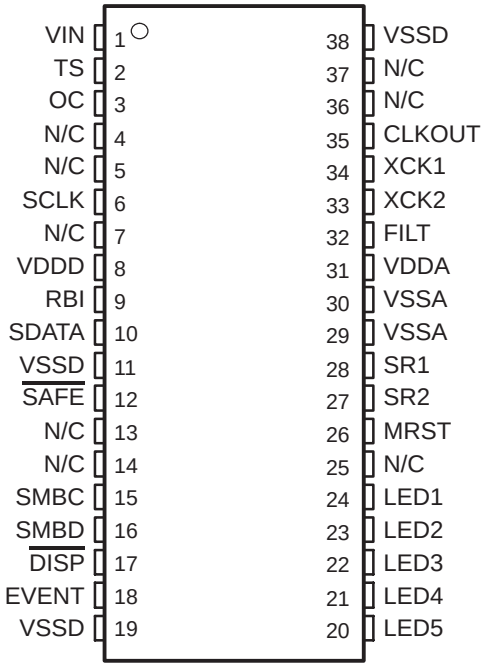

NC − No internal connection

AVAILABLE OPTIONS

T_A	PACKAGE 38-PIN TSSOP (DBT)
−20°C to 85°C	bq2083DBT−V1P2(1)

(1) The bq2083−V1P2 is available taped and reeled. Insert an R suffix to the device type (e.g., bq2083DBTR−V1P2) to order tape and reel version.

Terminal Functions

TERMINAL NAME	TERMINAL No.	I/O	DESCRIPTION
CLKOUT	35	I	32.768-kHz output to the bq29311
$\overline{\text{DISP}}$	17	I	Display control for the LED drivers LED1 through LED5
FILT	32	I	Analog input connected to the external PLL filter
EVENT	18	I	Input from bq29311 XALERT output
LED1	24	O	LED display segments that each may drive an external LED
LED2	23	O	
LED3	22	O	
LED4	21	O	
LED5	20	O	
MRST	26	I	Master reset input that forces the device into reset when held high
N/C	4, 5, 7, 13, 14, 25, 36, 37	–	No connection
OC	3	I	Analog input for auto ADC offset compensation; should be connected to VSSA
RBI	9	I	Register backup that provides backup potential to the bq2083−V1P2 data registers during periods of low operating voltage. RBI accepts a storage capacitor or a battery input.
$\overline{\text{SAFE}}$	12	O	Output for additional level of safety protection; e.g., fuse blow.
SCLK	6	O	Communication clock to the bq29311
SDATA	10	I/O	Data transfer to and from bq29311
SMBC	15	I/O	SMBus clock open-drain bidirectional pin used to clock the data transfer to and from the bq2083−V1P2
SMBD	16	I/O	SMBus data open-drain bidirectional pin used to transfer address and data to and from the bq2083−V1P2
SR1	28	I	Connections for a small-value sense resistor to monitor the battery charge- and discharge-current flow
SR2	27	I	
TS	2	I	Thermistor voltage input connection to monitor temperature
VDDA	31	I	Positive supply for analog circuitry
VDDD	8	I	Positive supply for digital circuitry and I/O pins
VIN	1	I	Single cell voltage input from the bq29311
VSSA	29, 30	I	Negative supply for analog circuitry
VSSD	11, 19, 38	I	Negative supply for digital circuitry
XCK1	34	I	32.768 kHz crystal oscillator input pin
XCK2	33	O	32.768 kHz crystal oscillator output pin

ABSOLUTE MAXIMUM RATINGS

over operating free-air temperature range unless otherwise noted(1)

		UNIT
Supply voltage range, V_{DD} relative to V_{SS}(2)		−0.3 V to 6 V
Open-drain I/O pins, $V_{(IOD)}$ relative to V_{SS}(2)		−0.3 V to 6 V
Input voltage range to all other pins, V_I relative to V_{SS}(2)		−0.3 V to V_{DD} + 0.3 V
ESDS Rating	HBM	1.5 kV
	CDM	1.5 kV
	MM	50 V
Operating free-air temperature range, T_A		−20°C to 85°C
Storage temperature range, T_{stg}		−65°C to 150°C

(1) Stresses beyond those listed under “absolute maximum ratings” may cause permanent damage to the device. These are stress ratings only, and functional operation of the device at these or any other conditions beyond those indicated under “recommended operating conditions” is not implied. Exposure to absolute-maximum-rated conditions for extended periods may affect device reliability.
(2) VSS refers to the common node of $V_{(SSA)}$, $V_{(SSD)}$, and $V_{(SSP)}$.

ELECTRICAL CHARACTERISTICS

V_{DD} = 3.0 V to 3.6 V, T_A = −20°C to 85°C (unless otherwise noted)

PARAMETER		TEST CONDITIONS	MIN	TYP	MAX	UNIT
V_{DD}	Supply voltage	V_{DDA} and V_{DDD}	3.0	3.3	3.6	V
I_{DD}	Operating current	No flash programming		450		µA
$V_{(OLS)}$	Output voltage low: (LED1−LED5)	$I_{(OLS)}$ = 10 mA			0.4	V
V_{IL}	Input voltage low $\overline{DISP}$		−0.3		0.8	V
V_{IH}	Input voltage high $\overline{DISP}$		2		V_{CC} + 0.3	V
V_{OL}	Output voltage low SMBC, SMBD, SDATA, SCLK, EVENT, $\overline{SAFE}$	I_{OL} = 10 mA			0.4	V
$V_{(ILS)}$	Input voltage low SMBC, SMBD, SDATA, SCLK, EVENT, $\overline{SAFE}$		−0.3		0.8	V
$V_{(IHS)}$	Input voltage high SMBC, SMBD, SDATA, SCLK, EVENT, $\overline{SAFE}$		1.7		6	V
$V_{(AI)}$	Input voltage range VIN, TS, OC		V_{SS} − 0.3		1.0	V
$Z_{(AI1)}$	Input impedance SR1, SR2	0 V–1.0 V	10			MΩ
$Z_{(AI2)}$	Input impedance VIN, TS, OC	0 V–1.0 V	8			MΩ

Power-On Reset (see Figure 1)

PARAMETER		TEST CONDITIONS	MIN	TYP	MAX	UNIT
V_{IT-}	Negative-going voltage input		2.1	2.3	2.5	V
V_{hys}	Power-on reset hysteresis		50	125	210	mV

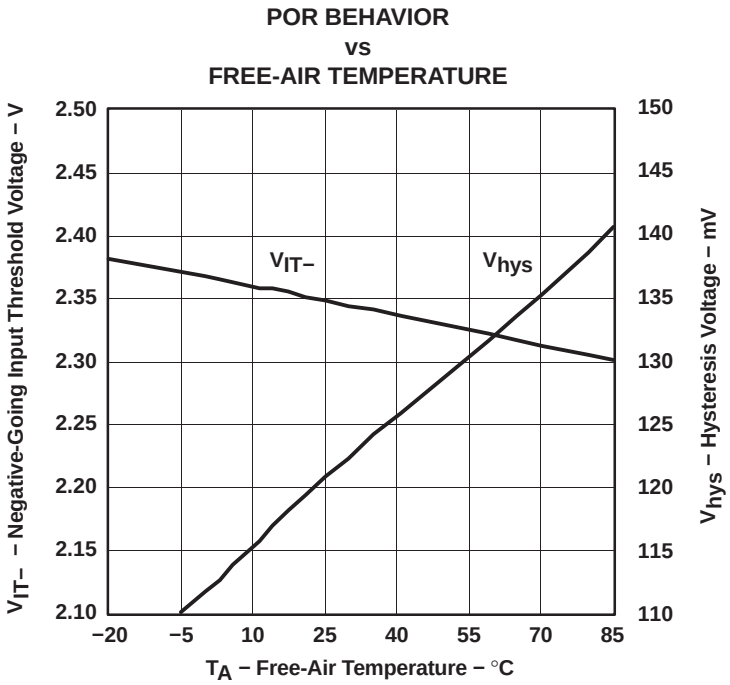

Figure 1

INTEGRATING ADC CHARACTERISTICS

V_{DD} = 3.0 V to 3.6 V, T_A = −20°C to 85°C (unless otherwise noted)

PARAMETER		TEST CONDITIONS	MIN	TYP	MAX	UNIT
$V_{(SR)}$	Input voltage range, $V_{(SR2)}$ and $V_{(SR1)}$	$V_{SR} = V_{(SR2)} - V_{(SR1)}$	–0.3		1.0	V
$V_{(SROS)}$	Input offset			1		µV
INL	Integral nonlinearity error			0.003%	0.009%	

PLL SWITCHING CHARACTERISTICS

V_{DD} = 3.0 V to 3.6 V, T_A = −20°C to 85°C (unless otherwise noted)

PARAMETER		TEST CONDITIONS	MIN	TYP	MAX	UNIT
$t_{(sp)}$	Start-up time (see Note 1)	±0.5% frequency error		2	5	ms

(1) The frequency error is measured from 32.768 Hz.

External Oscillator

V_{DD} = 3.0 V to 3.6 V, T_A = −20°C to 85°C (unless otherwise noted)

PARAMETER		TEST CONDITIONS	MIN	TYP	MAX	UNIT
$f_{(exo)}$	Frequency error (see Note 1)		−0.025%		0.025%	
		V_{DD} = 3.3 V	−1%		1%	
$f_{(sxo)}$	Start-up time (see Note 2)				275	µs

(1) The frequency error is measured from 32.768 Hz.
(2) The start-up time is defined as the time it takes for the oscillator output frequency to be ±1%.

SMBUS TIMING SPECIFICATIONS

V_{DD} = 3.0 V to 3.6 V, T_A = −20°C to 85°C (unless otherwise noted)

PARAMETER		TEST CONDITIONS	MIN	TYP	MAX	UNIT
f_{SMB}	SMBus operating frequency	Slave mode, SMBC 50% duty cycle	10		100	kHz
f_{MAS}	SMBus master clock frequency	Master mode, no clock low slave extend		51.2		kHz
t_{BUF}	Bus free time between start and stop		4.7			µs
$t_{hd(STA)}$	Hold time after (repeated) start		4.0			µs
$t_{su(STA)}$	Repeated start setup time		4.7			µs
$t_{su(STO)}$	Stop setup time		4.0			µs
$t_{hd(DAT)}$	Data hold time	Receive mode	0			ns
		Transmit mode	300			
$t_{su(DAT)}$	Data setup time		250			ns
$t_{TIMEOUT}$	Error signal/detect	See Note 1	25		35	ms
t_{low}	Clock low period		4.7			µs
t_{high}	Clock high period	See Note 2	4.0		50	µs
$t_{low(SEXT)}$	Cumulative clock low slave extend time	See Note 3			25	ms
$t_{low(MEXT)}$	Cumulative clock low master extend time	See Note 4			10	ms
t_f	Clock/data fall time	See Note 5			300	ns
t_r	Clock/data rise time	See Note 6			1000	ns

(1) The bq2083−V1P2 times out when any clock low exceeds $t_{TIMEOUT}$
(2) t_{high} Max. is minimum bus idle time. SMBC = 1 for t > 50 µs causes reset of any transaction involving bq2083−V1P2 that is in progress.
(3) $t_{low(SEXT)}$ is the cumulative time a slave device is allowed to extend the clock cycles in one message from initial start to the stop.
(4) $t_{low(MEXT)}$ is the cumulative time a master device is allowed to extend the clock cycles in one message from initial start to the stop.
(5) Rise time t_r = (V_{ILMAX} − 0.15 V) to (V_{IHMIN} + 0.15 V).
(6) Fall time t_f = 0.9 V_{DD} to (V_{ILMAX} − 0.15 V).

DATA FLASH MEMORY SWITCHING CHARACTERISTICS

V_{DD} = 3.0 V to 3.6 V, T_A = −20°C to 85°C (unless otherwise noted)

PARAMETER		TEST CONDITIONS	MIN	TYP	MAX	UNIT
$t_{(RETENSION)}$	Data retention	See Note 1	10			Years
	Flash programming write-cycles	See Note 1		10^5		Cycles
$t_{(WORDPROG)}$	Word programming time	See Note 1			2	ms
$I_{(DDPROG)}$	Flash-write supply current	See Note 1		14	16	mA

(1) Specified by design. Not production tested.

Register Backup

PARAMETER		TEST CONDITIONS	MIN	TYP	MAX	UNIT
$I_{(RBI)}$	RBI data-retention input current (see Note 1)	V_{RB} > 3.0 V, V_{DD} < V_{IT}		10	100	nA
$V_{(RBI)}$	RBI data-retention voltage		1.3			V

(1) Specified by design. Not production tested.

SMBUS TIMING DIAGRAMS

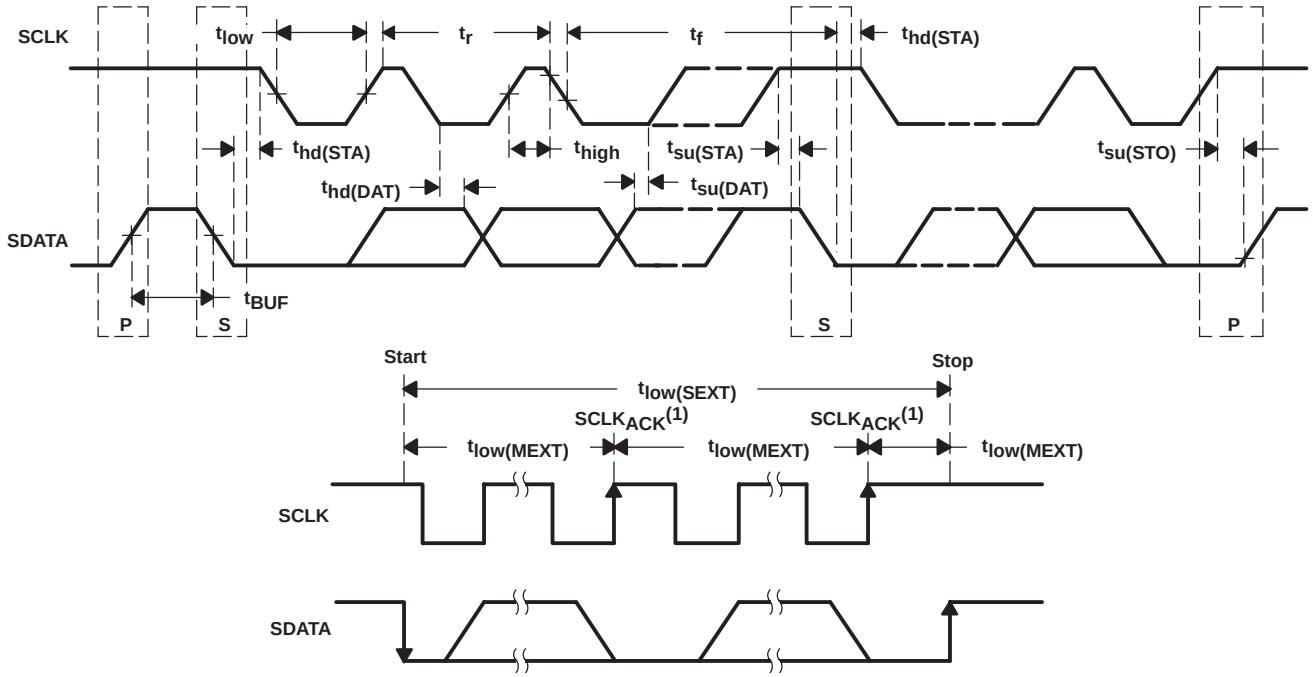

(1) $SCLK_{ACK}$ is the acknowledge-related clock pulse generated by the master.

Figure 2. SMBus Timing Diagram

FUNCTIONAL DESCRIPTION

General Operation

The bq2083−V1P2 determines battery capacity by monitoring the amount of charge input or removed from a rechargeable battery. In addition to measuring charge and discharge, the bq2083−V1P2 measures battery voltage, temperature, and current, estimates battery self-discharge, and monitors the battery for low-voltage thresholds. The bq2083−V1P2 measures charge and discharge activity by monitoring the voltage across a small-value series sense resistor between the battery's negative terminal and the negative terminal of the battery pack. The available battery charge is determined by monitoring this voltage and correcting the measurement for environmental and operating conditions.

The bq2083−V1P2 interfaces with the bq29311 to perform battery protection, cell balancing and voltage translation functions.

The bq2083−V1P2 can accept any NTC thermistor (default is Semitec 103AT) for temperature measurement or can be configured to use its internal temperature sensor. The bq2083−V1P2 uses temperature to monitor the battery pack and to compensate the self-discharge estimate.

Measurements

The bq2083−V1P2 uses an integrating sigma-delta analog-to-digital converter (ADC) for current measurement and a second sigma delta ADC for battery voltage and temperature measurement. Voltage, current, and temperature measurements are made every second.

Charge and Discharge Counting

The integrating ADC measures the charge and discharge flow of the battery by monitoring a small-value sense resistor between the SR1 and SR2 pins as shown in the schematic. The integrating ADC measures bipolar signals from −0.3 to 1.0 V. The bq2083−V1P2 detects charge activity when $V_{SR} = V_{(SR1)}–V_{(SR2)}$ is positive and discharge activity when $V_{SR} = V_{(SR1)}–V_{(SR2)}$ is negative. The bq2083−V1P2 continuously integrates the signal over time, using an internal counter. The fundamental rate of the counter is 2.6 nVh. The bq2083−V1P2 updates Remaining Capacity() with the charge or discharge accumulated in this internal counter once every second.

Offset Calibration

The bq2083−V1P2 provides an autocalibration feature to cancel the voltage offset error across SR_1 and SR_2 for maximum charge measurement accuracy. The bq2083−V1P2 performs autocalibration when the SMBus lines stay low for a minimum of 20 s. The bq2083−V1P2 is capable of automatic offset calibration down to 1µV.

Digital Filter

The bq2083−V1P2 does not measure charge or discharge counts below the digital filter threshold. The digital filter threshold is programmed in the *Digital Filter* DF 0x2b and should be set sufficiently high to prevent false signal detection with no charge or discharge flowing through the sense resistor.

Voltage

While monitoring SR1 and SR2 for charge and discharge currents, the bq2083−V1P2 monitors the individual series cell voltages through the bq29311. The bq2083−V1P2 configures the bq29311 to present the selected cell to the VCELL pin of the bq29311 which should be connected to VIN of the bq2083−V1P2. The internal ADC of the bq2083−V1P2 then measures the voltage and scales it appropriately. The bq2083−V1P2 then reports the Voltage( ) and the individual cell voltages in VCELL1, VCELL2, VCELL3, and VCELL4 located in 0x3c−0x3f.

Current

The bq2083−V1P2 uses the SR1 and SR2 inputs to measure and calculate the battery charge and discharge current as represented in the data register Current().

Temperature

The TS input of the bq2083−V1P2 in conjunction with an NTC thermistor measures the battery temperature as shown in the schematic. The bq2083−V1P2 reports temperature in Temperature( ).

The bq2083−V1P2 can also be configured to use its internal temperature sensor by setting the IT bit in *Misc Configuration* DF 0x2a. Data flash locations DF 0xa4 through DF 0xad also have to be changed to prescribed values if the internal temperature sensor option is selected.

Gas Gauge Operation

Table 1. Data Flash Settings for Internal or External Temperature Sensor

LABEL	LOCATION Dec (Hex)	INTERNAL TEMP SENSOR SETTING Dec (Hex)	EXTERNAL TEMP SENSOR SETTING Dec (Hex)
Misc. Config	42 (0x2a)	Bit 7 = 1	Bit 7 = 0
TS Const1 A3	164/5 (0xa4/5)	0 (0x0000)	−28285 (0x9183)
TS Const2 A2	166/7 (0xa6/7)	0 (0x0000)	20848 (0x5170)
TS Const3 A1	168/9 (0xa8/9)	−11136 (0xd480)	−7537 (0xe28f)
TS Const4 A0	170/1 (0xaa/b)	5734 (0x1666)	4012 (0x0fac)
Min Temp AD	172/3 (0xac/d)	0 (0x0000)	0 (0x000)
Max Temp	174/5 (0xae/f)	5734 (0x1666)	4012 (0x0fac)

If AD < Min Temp AD then Temp = Max Temp

else

Temp = ((A3 × AD × 2^−16 +A2) × AD × 2^−16 + A1) × AD × 2^−16 + A0)

General

The operational overview in Figure 3 illustrates the gas gauge operation of the bq2083−V1P2. Table 3 describes the bq2083−V1P2 registers.

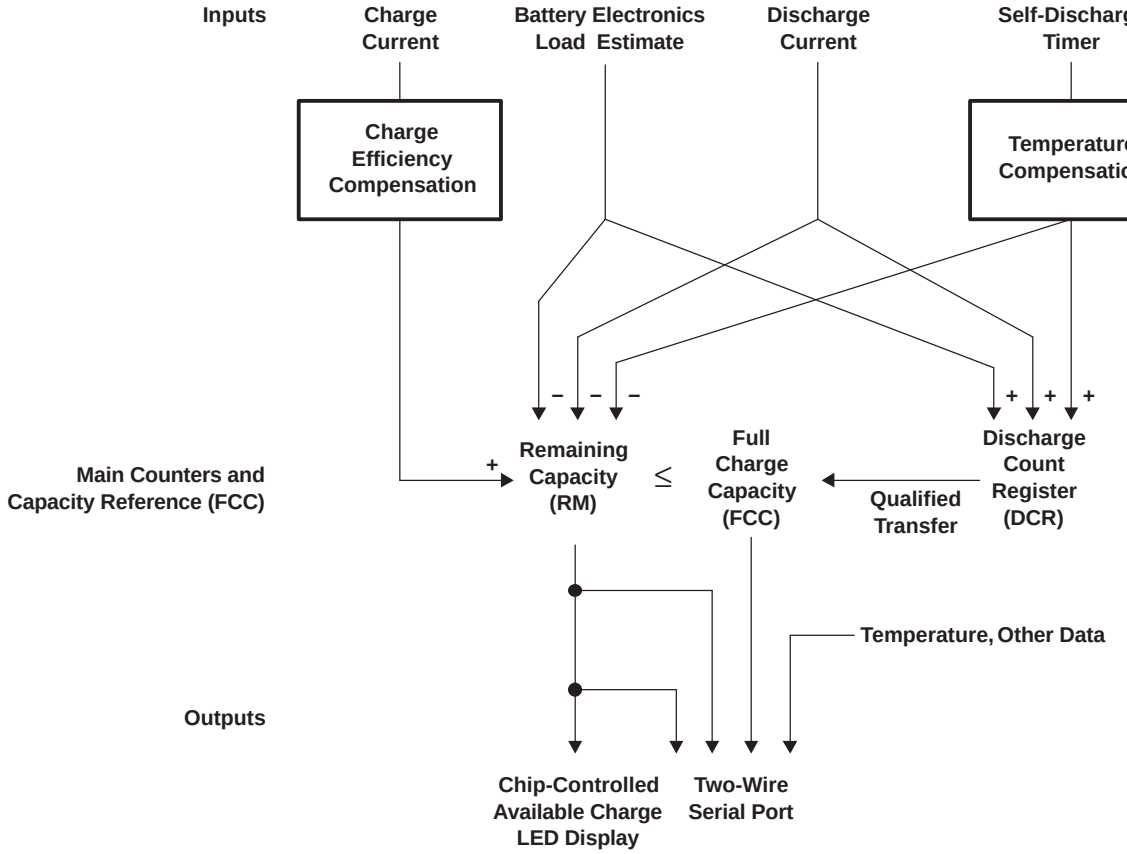

Figure 3. bq2083−V1P2 Operational Overview

The bq2083−V1P2 accumulates a measure of charge and discharge currents and estimates self-discharge of the battery. The bq2083−V1P2 compensates the charge current measurement for temperature and state-of-charge of the battery. The bq2083−V1P2 also adjusts the self-discharge estimation based on temperature.

The main charge counter RemainingCapacity( ) (RM) represents the available capacity or energy in the battery at any given time. The bq2083−V1P2 adjusts RM for charge, self-discharge, and other compensation factors. The information in the RM register is accessible through the SMBus interface and is also represented through the LED display.

The FullChargeCapacity( ) (FCC) register represents the last measured full discharge of the battery. It is used as the battery full-charge reference for relative capacity indication. The bq2083−V1P2 updates FCC after the battery undergoes a qualified discharge from nearly full to a low battery level. FCC is accessible through the SMBus interface.

The Discharge Count Register (DCR) is a non-accessible register that tracks discharge of the battery. The bq2083−V1P2 uses the DCR register to update the FCC register if the battery undergoes a qualified discharge from nearly full to a low battery level. In this way, the bq2083−V1P2 learns the true discharge capacity of the battery under system use conditions.

Main Gas-Gauge Registers

The gas-gauge register functions are described in Table 3.

RemainingCapacity( ) (RM)

RM represents the remaining capacity in the battery. The bq2083−V1P2 computes RM in units of either mAh or 10 mWh depending on the selected mode. See Battery Mode( ) (0x03) for units configuration.

RM counts up during charge to a maximum value of FCC and down during discharge and self-discharge to a minimum of 0. In addition to charge and self-discharge compensation, the bq2083−V1P2 calibrates RM at three low-battery-voltage thresholds, EDV2, EDV1, and EDV0 and three programmable midrange thresholds VOC25, VOC50, and VOC75. This provides a voltage-based calibration to the RM counter.

DesignCapacity( ) (DC)

The DC is the user-specified battery full capacity. It is calculated from *Pack Capacity* DF 0x31-0x32 and is represented in units of mAh or 10 mWh. It also represents the full-battery reference for the absolute display mode.

FullChargeCapacity( ) (FCC)

FCC is the last measured discharge capacity of the battery. It is represented in units of either mAh or 10 mWh, depending on the selected mode. On initialization, the bq2083−V1P2 sets FCC to the value stored in *Last Measured Discharge* DF 0x35-0x36. During subsequent discharges, the bq2083−V1P2 updates FCC with the last measured discharge capacity of the battery. The last measured discharge of the battery is based on the value in the DCR register after a qualified discharge occurs. Once updated, the bq2083−V1P2 writes the new FCC value to data flash in mAh to *Last Measured Discharge*. FCC represents the full battery reference for the relative display mode and relative state of charge calculations.

Discharge Count Register (DCR)

The DCR register counts up during discharge, independent of RM. DCR counts discharge activity, battery load estimation, and self-discharge increment. The bq2083−V1P2 initializes DCR, at the beginning of a discharge, to FCC − RM when RM is within the programmed value in *Near Full* DF 0x2f. The DCR initial value of FCC − RM is reduced by FCC/128 if SC = 1 (bit 5 in *Gauge Configuration*) and is not reduced if SC = 0. DCR stops counting when the battery voltage reaches the EDV2 threshold on discharge.

*Capacity learning (*FCC *Update) and Qualified Discharge*

The bq2083−V1P2 updates FCC with an amount based on the value in DCR if a qualified discharge occurs. The new value for FCC equals the DCR value plus the programmable nearly full and low battery levels, according to the following equation:

$$\text{FCC (new)} = \text{DCR (final)} = \text{DCR (initial)} + \text{Measured Discharge to EDV2} + (\text{FCC} \times \textit{Battery Low\%}) \quad (1)$$

Battery Low % = (value stored in DF 0x2e) ÷ 2.56

A qualified discharge occurs if the battery discharges from RM ≥ FCC − *Near Full* to the EDV2 voltage threshold with the following conditions:

- No valid charge activity occurs during the discharge period. A valid charge is defined as a charge of 10 mAh into the battery.

- No more than 256 mAh of self-discharge or battery load estimation occurs during the discharge period.
- The temperature does not drop below the low temperature thresholds programmed in *Learning Low Temp* DF 0x9b when EDV2 is detected.
- The battery voltage reaches the EDV2 threshold during the discharge period and the voltage is greater than or equal to the EDV2 threshold minus 384 mV when the bq2083−V1P2 detected EDV2.
- No midrange voltage correction occurs during the discharge period.
- Current remains ≥ 3C/32 when EDV2 or *Battery Low* % level is reached.
- No overload condition exists when EDV2 threshold is reached or if RM( ) has dropped to *Battery Low%* ∗FCC.

The bq2083−V1P2 sets VDQ=1 in pack status when qualified discharge begins. The bq2083−V1P2 sets VDQ=0 if any disqualifying condition occurs. FCC cannot be reduced by more than 256 mAh or increased by more than 512 mAh during any single update cycle. The bq2083−V1P2 saves the new FCC value to the data flash within 4 seconds of being updated.

End-of-Discharge Thresholds and Capacity Correction

The bq2083−V1P2 monitors the battery for three low-voltage thresholds, EDV0, EDV1, and EDV2. The EDV thresholds can be programmed for determination based on the overall pack voltage or an individual cell level. The EDVV bit in *Pack Configuration* DF 0x28 configures the bq2083−V1P2 for overall voltage or single-cell EDV thresholds. If programmed for single cell EDV determination, the bq2083−V1P2 determines EDV on the basis of the lowest single-cell voltage. Fixed EDV thresholds may be programmed in *EMF/EDV0* DF 0x84-0x85, *EDV C0 Factor/EDV1* DF 0x86-0x87, and *EDV R Factor/EDV2* DF 0x88-0x89. If the CEDV bit in *Gauge Configuration* DF 0x29 is set, automatic EDV compensation is enabled and the bq2083−V1P2 computes the EDV0, EDV1, and EDV2 thresholds based on the values in DF 0x84-0x8d and the battery's current discharge rate and temperature. The bq2083−V1P2 disables EDV detection if Current( ) exceeds the *Overload Current* threshold programmed in DF 0x58 − DF 0x59. The bq2083−V1P2 resumes EDV threshold detection after Current( ) drops below the *Overload Current* threshold. Any EDV threshold detected is reset after charge is applied and VDQ is cleared after 10mAh of charge.

Table 2. State of Charge Based on Low Battery Voltage

THRESHOLD	RELATIVE STATE OF CHARGE
EDV0	0%
EDV1	3%
EDV2	*Battery Low %*

The bq2083−V1P2 uses the EDV thresholds to apply voltage-based corrections to the RM register according to Table 1. The bq2083−V1P2 performs EDV-based RM adjustments with Current( ) ≥ C/32. No EDVs are set if current < C/32. The bq2083−V1P2 adjusts RM as it detects each threshold. If the voltage threshold is reached before the corresponding capacity on discharge, the bq2083−V1P2 reduces RM to the appropriate amount as shown in Table 2. This reduction occurs only if current ≥ C/32 when the EDV threshold is detected. If RM reaches the capacity level before the voltage threshold is reached on discharge, the bq2083−V1P2 prevents RM from decreasing further until the battery voltage reaches the corresponding threshold only on a full learning cycle discharge. RM is not held at the associated EDV percentage on a nonlearning discharge cycle (VDQ=0) or if current < C/32.

If *Battery Low* % is set to zero, EDV1 and EDV0 corrections are disabled.

Table 3. bq2083–V1P2 Register Functions

FUNCTION	COMMAND CODE	ACCESS	UNITS
ManufacturerAccess	0x00	read/write	NA
RemainingCapacityAlarm	0x01	read/write	mAh, 10 mWh
RemainingTimeAlarm	0x02	read/write	minutes
BatteryMode	0x03	read/write	NA
AtRate	0x04	read/write	mA, 10mW
AtRateTimeToFull	0x05	read	minutes
AtRateTimeToEmpty	0x06	read	minutes
AtRateOK	0x07	read	Boolean
Temperature	0x08	read	0.1°K
Voltage	0x09	read	mV
Current	0x0a	read	mA
AverageCurrent	0x0b	read	mA
MaxError	0x0c	read	percent
RelativeStateOfCharge	0x0d	read	percent
AbsoluteStateOfCharge	0x0e	read	percent
RemainingCapacity	0x0f	read	mAh, 10 mWh
FullChargeCapacity	0x10	read	mAh, 10 mWh
RunTimeToEmpty	0x11	read	minutes
AverageTimeToEmpty	0x12	read	minutes
AverageTimeToFull	0x13	read	minutes
ChargingCurrent	0x14	read	mA
ChargingVoltage	0x15	read	mV
Battery Status	0x16	read	NA
CycleCount	0x17	read	cycles
DesignCapacity	0x18	read	mAh, 10 mWh
DesignVoltage	0x19	read	mV
SpecificationInfo	0x1a	read	NA
ManufactureDate	0x1b	read	NA
SerialNumber	0x1c	read	integer
Reserved	0x1d-0x1f	0	0
ManufacturerName	0x20	read	string
DeviceName	0x21	read	string
DeviceChemistry	0x22	read	string
ManufacturerData	0x23	read	string
Pack status	0x2f (LSB)	read	NA
Pack configuration	0x2f (MSB)	read	NA
VCELL4	0x3c	read	mV
VCELL3	0x3d	read	mV
VCELL2	0x3e	read	mV
VCELL1	0x3f	read	mV

Self-Discharge

The bq2083−V1P2 estimates the self-discharge of the battery to maintain an accurate measure of the battery capacity during periods of inactivity. The bq2083−V1P2 makes self-discharge adjustments to RM( ) every 1/4 seconds when awake and periodically when in sleep mode. The period is determined by *Sleep Timer* DF 0xe7.

The self-discharge estimation rate for 25°C is doubled for each 10 degrees above 25°C or halved for each 10 degrees below 25°C. The following table shows the relation of the self-discharge estimation at a given temperature to the rate programmed for 25°C (Y% per day programmed in DF 0x2c).

Table 4. Self-Discharge for Rate Programmed

TEMPERATURE (°C)	SELF-DISCHARGE RATE
Temp < 10	1/4 Y% per day
10 ≤ Temp <20	1/2 Y% per day
20 ≤ Temp <30	Y% per day
30 ≤ Temp <40	2Y% per day
40 ≤ Temp <50	4Y% per day
50 ≤ Temp <60	8Y% per day
60 ≤ Temp <70	16Y% per day
70≤ Temp	32Y% per day

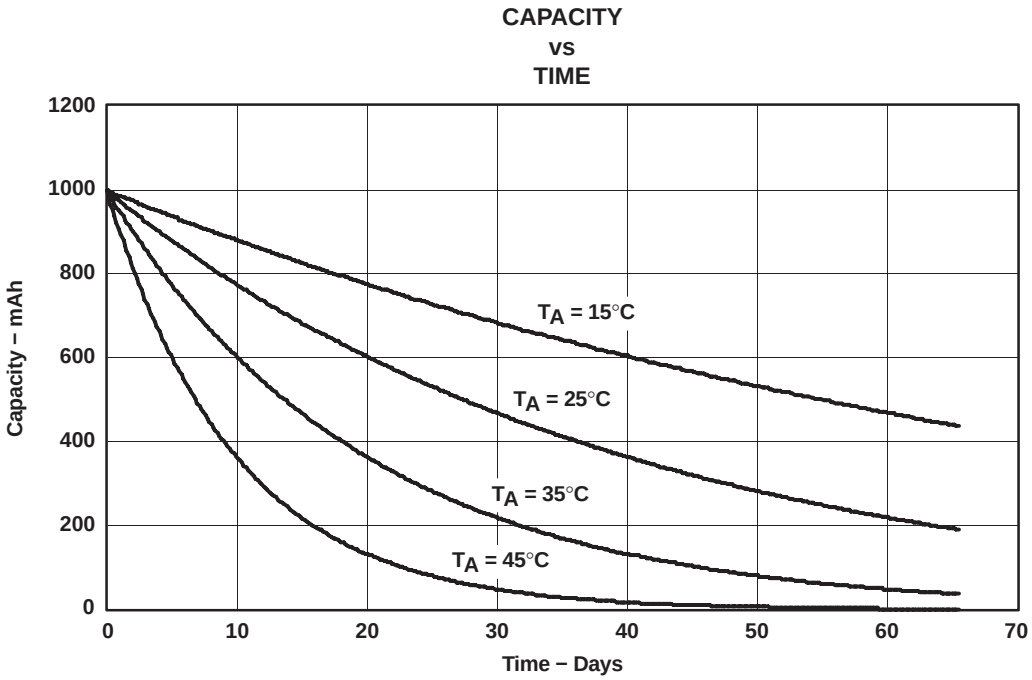

Figure 4. Self-Discharge at 2.5%/Day at 25°C

Figure 4 illustrates how the self-discharge estimate algorithm adjusts RemainingCapacity( ) versus temperature.

Battery Electronic Load Compensation

The bq2083−V1P2 can be configured to compensate for a constant load (as from battery electronics) present in the battery pack at all times. The bq2083−V1P2 applies the compensation continuously when the charge or discharge is below the digital filter. The bq2083−V1P2 applies the compensation in addition to self-discharge. The compensation occurs at a rate determined by the value stored in *Electronics Load* DF 0x2d. The compensation range is 0 μA–765 μA in steps of approximately 3 μA.

Midrange Capacity Corrections

The bq2083−V1P2 applies midrange capacity corrections when the VCOR bit is set in *Gauge Configuration* DF 0x29. The bq2083−V1P2 adjusts RM to the associated percentage at three different voltage levels: VOC25, VOC50, and VOC75. The VOC values represent the open circuit battery voltage at which RM corresponds to the associated for each threshold.

For the midrange corrections to occur, the temperature must be in the range of 19°C to 31°C inclusive and the Current( ) and AverageCurrent( ) must both be between −64 mA and 0. The bq2083−V1P2 makes midrange corrections as shown in Table 5. For a correction to occur, the bq2083−V1P2 must detect the need for correction twice during subsequent 20-s intervals. With the VCOR bit set, the bq2083−V1P2 makes midrange corrections whenever conditions permit. If the OTVC bit in *Gauge Configuration* DF 0x29 is set and VCOR = 0, the bq2083−V1P2 makes a single attempt of mid-range correction immediately after device reset and does not require a second validation.

Table 5. Midrange Corrections

CONDITION		RESULT
Voltage( )	≥ VOC75 and RelativeStateOfCharge( ) ≤ 63%	RelativeStateOfCharge()→75%
	< VOC75 and RelativeStateOfCharge( ) ≥ 87%	RelativeStateOfCharge()→75%
	≥VOC50 and RelativeStateOfCharge( ) ≤ 38%	RelativeStateOfCharge()→50%
	<VOC50 and RelativeStateOfCharge( ) ≥ 62%	RelativeStateOfCharge()→50%
	≥ VOC25 and RelativeStateOfCharge( ) ≤ 13%	RelativeStateOfCharge()→25%
	< VOC25 and RelativeStateOfCharge( ) ≥ 37%	RelativeStateOfCharge()→25%

Charge Control

Charging Voltage and Current Broadcasts

The bq2083−V1P2 supports SBS charge control by broadcasting the ChargingCurrent( ) and ChargingVoltage( ) to the Smart Charger address. The bq2083−V1P2 broadcasts the requests every 10 seconds. The bq2083−V1P2 updates the values used in the charging current and voltage broadcasts based on the battery's state of charge, voltage, and temperature. The charge voltage is programmed in *Charging Voltage* DF 0x039-0x3a. The charge current may take any of four different values: Fast Charging Current DF (0x3d–0x3c), Maintenance Charging Current (DF 0x3f), Precharge Current (0x41), or 0. The charge current depends on charge state and operating conditions.

The bq2083−V1P2 internal charge control is compatible with the constant current/constant voltage profile for Li-Ion. The bq2083−V1P2 detects primary charge termination on the basis of the tapering charge current during the constant-voltage phase.

Alarm Broadcasts to Smart Charger and Host

If any of the bits 8−15 in BatteryStatus( ) are set, the bq2083−V1P2 broadcasts an AlarmWarning( ) message to the Host address. If any of the bits 12−15 in BatteryStatus( ) are set, the bq2083−V1P2 also sends an AlarmWarning( ) message to the Smart Charger address. The bq2083−V1P2 repeats the AlarmWarning( ) messages every 10 seconds until the alarm bits are cleared.

Precharge Qualification

The bq2083−V1P2 sets ChargingCurrent( ) to the precharge rate as programmed in *Precharge Current* DF 0x41 under the following conditions:

- Voltage: The bq2083−V1P2 requests the precharge charge rate when Voltage( ) drops below the precharge threshold or when the EDV0 threshold is detected. Once requested, a precharge rate remains until Voltage( ) increases above the precharge threshold and the EDV0 condition does not exist. The precharge threshold is programmed in *Precharge Voltage* DF 0x3b−0x3c.
- Temperature: The bq2083−V1P2 requests the precharge rate when Temperature( ) is between 0°C and the precharge threshold programmed in *Precharge Temp* 0x43. Temperature( ) must be 3°C higher than *Precharge Temp* to allow the fast-charge rate.

NOTE:

If Current() falls below the mA value programmed in Charge Detect Current (DF 0xe9, 0xea) then the pre-charge FET (if enabled) is turned off to reduce power consumption.

Charge Suspension

The bq2083−V1P2 may temporarily suspend charge if it detects a charging fault. A charging fault includes the following conditions.

- Overcurrent: An overcurrent condition exists when the bq2083−V1P2 measures the charge current to be equal to or greater than *Overcurrent Margin* plus ChargingCurrent( ). *Overcurrent Margin* is programmed in DF 0x5c−0x5d. On detecting an overcurrent condition, the bq2083−V1P2 sets the ChargingCurrent( ) to zero and sets the TERMINATE_CHARGE_ALARM bit in Battery Status( ). The overcurrent condition and TERMINATE_ CHARGE_ALARM are cleared when the measured current drops below *Overcurrent Margin*.
- Overvoltage: An overvoltage condition exists when the bq2083−V1P2 measures the battery voltage to be more than *Over Voltage Margin* plus ChargingVoltage( ), or when a cell voltage has exceeded the overvoltage limit programmed in *Cell Over Voltage*. *Over Voltage Margin* is programmed in DF 0x5a−0x5b and *Cell Over Voltage* in DF 0x60. On detecting an overvoltage condition, the bq2083−V1P2 sets the ChargingCurrent( ) to zero and sets the TERMINATE_CHARGE_ALARM bit in BatteryStatus( ). The bq2083−V1P2 clears the TERMINATE_ CHARGE_ALARM bit when it detects that the battery is no longer being charged (DISCHARGING bit set in BatteryStatus( )). The bq2083−V1P2 continues to broadcast zero charging current until the overvoltage condition is cleared. The overvoltage condition is cleared when the measured battery voltage drops below the ChargingVoltage( ) plus the *Over Voltage Margin* and all cell voltages are less than the *Cell Over Voltage* Reset threshold in DF 0xcf, 0xd0.
- Overtemperature: An overtemperature condition exists when Temperature( ) is greater than or equal to the *Max Temperature* value programmed in DF 0x53, 0x54. On detecting an overtemperature condition, the bq2083−V1P2 sets the ChargingCurrent( ) to zero and sets the OVER_TEMP_ALARM and TERMINATE_CHARGE_ ALARM bit in BatteryStatus( ) and the CVOV bit in pack status. The overtemperature condition is cleared when Temperature( ) is equal to or below (*Max Temperature − Temperature Hysteresis* DF 0x55, 0x56) or 43°C.
- Overcharge: An overcharge condition exists if the battery is charged more than the *Maximum Overcharge* value after RM = FCC. *Maximum Overcharge* is programmed in DF 0x4e-0x4f. On detecting an overcharge condition, the bq2083−V1P2 sets the ChargingCurrent( ) to zero and sets the OVER_CHARGED_ALARM, TERMINATE_CHARGE_ ALARM, and FULLY_CHARGED bits in BatteryStatus( ). The bq2083−V1P2 clears the TERMINATE_CHARGE_ ALARM when it detects that the battery is no longer being charged and clears the OVER_CHARGED_ALARM when 2mAh of discharge are measured. The FULLY_CHARGED bit remains set and the bq2083−V1P2 continues to broadcast zero charging current until RelativeStateOfCharge( ) is less than *Fully Charged Clear*% programmed in DF 0x47. The counter used to track overcharge capacity is reset with 2 mAh of discharge.
- Undertemperature: An undertemperature condition exists if Temperature( ) < 0°C. On detecting an under temperature condition, the bq2083−V1P2 sets ChargingCurrent( ) to zero. The bq2083−V1P2 sets ChargingCurrent( ) to the appropriate precharge rate or fast-charge rate when Temperature( ) ≥ 0°C.

Primary Charge Termination

The bq2083−V1P2 terminates charge if it detects a charge-termination condition based on current taper. A charge-termination condition includes the following:

For current taper, ChargingVoltage( ) must be set to the pack voltage desired during the constant-voltage phase of charging. The bq2083−V1P2 detects a current taper termination when the pack voltage is greater than or equal to ChargingVoltage( ) minus *Current Taper Qual Voltage* in DF 0x4a and the charging current is below a threshold determined by *Current Taper Threshold* in DF 0x48−0x49 and above 22.5 mA for two consecutive 40-second intervals.

Once the bq2083−V1P2 detects a Primary Charge Termination, the bq2083−V1P2 sets the TERMINATE_CHARGE_ALARM and FULLY_CHARGED bits in BatteryStatus( ), and sets the ChargingCurrent( ) to the maintenance charge rate as programmed in *Maintenance Charging Current* DF 0x3f, 0x40. On termination, the bq2083−V1P2 also sets RM to a programmed percentage of FCC, provided that RelativeStateOfCharge( ) is below the desired percentage of FCC and the CSYNC bit in *Gauge Configuration* DF 0x29 is set. The programmed percentage of FCC, *Fast Charge Termination %*, is set in DF 0x46. The bq2083−V1P2 clears the FULLY_CHARGED bit when RelativeStateOfCharge( ) is less than the programmed *Fully Charged Clear %*. The bq2083−V1P2 broadcasts the fast-charge rate when the FULLY_CHARGED bit is cleared and voltage and temperature permit. The bq2083−V1P2 clears the TERMINATE_CHARGE_ALARM

when it no longer detects that the battery is being charged or it no longer detects the termination condition. See Table 6 for a summary of BatteryStatus( ) alarm and status bit operation.

Table 6. Alarm and Status Bit Summary

BATTERY STATE	CONDITIONS	CC( ) CURRENT AND STATUS BITS SET	STATUS CLEAR CONDITION
Overcurrent	C( ) ≥ CC( ) + *Overcurrent Margin*	CC( ) = 0, TCA = 1	C( ) < *Overcurrent Margin*
Prolonged Overcurrent	AC( ) ≥ *Fast-Charging Current* + *Overcurrent Margin*	CVOV = 1 CC( ) = 0, TCA = 1	AC( ) < 256 mA
Overload	AC( ) ≤ *−Overload Current*	CVUV = 1	AC( ) < –256 mA
Overvoltage	V( ) ≥ CV( ) + *Over Voltage Margin* VCELL1, 2, 3, or 4 ≥ *Cell Over Voltage*	TCA = 1	DISCHARGING = 1
		CC( ) = 0, CVOV = 1	V( ) < CV( ) + *Over Voltage Margin* VCELL(all) ≤ *Cell Over Voltage Reset*
Overtemperature	T( ) ≥ *Max Temperature*	CC( ) = 0, OTA = 1, TCA = 1, CVOV = 1	T( ) ≤ *Max Temperature−Temperature Hysteresis* or T( ) ≤ 43°C
Overcharge	Capacity added after RM( ) = FCC( ) ≥ *Maximum Overcharge*	CC( ) = 0, FC = 1	RSOC( )< *Fully Charged Clear %*
		OCA = 1, TCA = 1	DISCHARGING = 1, and 2 mAh of discharge is measured
Undertemperature	T( ) < 0°C	CC( ) = 0	0°C ≤ T( )
	0°C ≤ T( ) < LTF	CC( ) = Precharge	T( ) ≥ LTF + DF 0x44 (default = 3°C)
Primary Charge Termination	Current taper	FC = 1, TCA = 1 *CC( )* = *Maintenance Charging Current*	RSOC( ) < *Fully Charged Clear%*
Fully Discharged	RM( ) < *Battery Low %* and DISCHARGING = 1	FD = 1	RSOC( ) ≥ 20%
Overdischarged	RM( ) = 0 V( ) ≤ *Terminate Voltage*	TDA = 1	V( ) > *Terminate Voltage* and RM( ) > 0
	VCELL1, 2, 3 or 4 ≤ *Cell Under Voltage*	TDA = 1, CVUV = 1	V( ) > *Terminate Voltage* VCELL(all) ≥ *Cell Under Voltage Reset*
Low Capacity	RM( ) < RCA( )	RCA = 1	RM( ) ≥ RCA( )
Low Run Time	ATTE( ) < RTA( )	RTA = 1	ATTE( ) ≥ RTA( )

NOTE: AC( ) = AverageCurrent( ), C( ) = Current( ), CV( ) = ChargingVoltage( ), CC( ) = ChargingCurrent( ), V( ) = Voltage( ), T( ) = Temperature( ), TCA = TERMINATE_CHARGE_ALARM, OTA = OVER_TEMPERATURE_ALARM, OCA = OVER_CHARGED_ALARM, TDA = TERMINATE_DISCHARGE_ALARM, FC = FULLY_CHARGED, FD = FULLY_DISCHARGED, RSOC( ) = RelativeStateOfCharge( ). RM( ) = RemainingCapacity( ), RCA = REMAINING_CAPACITY_ALARM, RTA = REMAINING_TIME_ALARM, ATTE( ) = AverageTimeToEmpty( ), RTA( ) = RemainingTimeAlarm( ), RCA( ) = RemainingCapacityAlarm( ). LTF = Low Temperature Fault threshold FCC( ) = Full Charge Capacity

Cell Balancing

The bq2083−V1P2 balances the cells during charge by discharging those cells above the threshold set in *Cell Balance Threshold* DF 0xd7−0xd8, if the maximum difference in cell voltages exceeds the value programmed in *Cell Balance Min* DF 0xdb. For cell balancing, the bq2083−V1P2 measures the cell voltages at an interval set in *Cell Balance Interval* DF 0xdc. On the basis of the cell voltages, the bq2083−V1P2 either selects the appropriate cell to discharge or adjusts the cell balance threshold up by the value programmed in *Cell Balance Window* 0xd9−0xda when all cells exceed the cell balance threshold or the highest cell exceeds the cell balance threshold by the cell balance window.

The cell balance threshold is reset to the value in *Cell Balance Threshold* at the start of every charge cycle. The threshold can be adjusted no more than once during a balance interval.

DISPLAY PORT

General

The display port drives a 3-, 4-, or 5-LED bar-graph display. The display is activated by a logic signal on the $\overline{\text{DISP}}$ input. The bq2083−V1P2 can display RM in either a relative or absolute mode with each LED representing a percentage of the full-battery reference. In relative mode, the bq2083−V1P2 uses FCC as the full-battery reference; in absolute mode, it uses Design Capacity (DC).

The DMODE bit in *Pack Configuration* DF 0x28 programs the bq2083−V1P2 for the absolute or relative display mode. The LED bits program the 3-, 4-, or 5-LED option.

Activation

The display may be activated at any time by a high-to-low transition on the $\overline{DISP}$ input. This is usually accomplished with a pullup resistor and a pushbutton switch. Detection of the transition activates the display and starts a four second display timer. Reactivation of the display requires that the $\overline{DISP}$ input return to a logic-high state and then transition low again. The second high-to-low transition can be detected only after the display timer expires. If unused, the $\overline{DISP}$ input must be pulled up to V_{CC}.

If the EDV0 bit is set, the bq2083−V1P2 disables the LED display.

Display Modes

In relative mode, each LED output represents 20%, 25%, or 33% of the RelativeStateOfCharge( ) value. In absolute mode, each LED output represents 20%, 25% or 33% of the AbsoluteStateOfCharge( ) value. Table 7 shows the display options for 5 LEDs Table 8 for 4 LEDs, and Table 9 for 3 LEDs.

In either mode, the bq2083−V1P2 blinks the LED display if RemainingCapacity( ) is less than Remaining CapacityAlarm( ). The display is disabled if EDV0 = 1.

Table 7. Display Mode for Five LEDs

CONDITION RELATIVE OR ABSOLUTE StateOfCharge( )	FIVE-LED DISPLAY OPTION				
	LED_1	LED_2	LED_3	LED_4	LED_5
EDV0 = 1	OFF	OFF	OFF	OFF	OFF
<20%	ON	OFF	OFF	OFF	OFF
≥20%, < 40%	ON	ON	OFF	OFF	OFF
≥40%, < 60%	ON	ON	ON	OFF	OFF
≥60%, < 80%	ON	ON	ON	ON	OFF
≥80%	ON	ON	ON	ON	ON

Table 8. Display Mode for Four LEDs

CONDITION RELATIVE OR ABSOLUTE StateOfCharge( )	FOUR-LED DISPLAY OPTION			
	LED1	LED2	LED3	LED4
EDV0 = 1	OFF	OFF	OFF	OFF
<25%	ON	OFF	OFF	OFF
≥25%, < 50%	ON	ON	OFF	OFF
≥50%, < 75%	ON	ON	ON	OFF
≥75%	ON	ON	ON	ON

Table 9. Display Mode for Three LEDs

CONDITION RELATIVE OR ABSOLUTE StateOfCharge( )	THREE-LED DISPLAY OPTION		
	LED1	LED2	LED3
EDV0 = 1	OFF	OFF	OFF
<34%	ON	OFF	OFF
≥34%, < 67%	ON	ON	OFF
≥67%	ON	ON	ON

Li-Ion Protector Control

The bq2083−V1P2 provides protection for Li-Ion batteries, as shown in Table 10. The bq2083−V1P2 uses the bq29311 to measure and report individual series cell voltages. The bq2083−V1P2 determines if a voltage protection condition has been breached and turns off the respective control FET via I^2C communication to the bq29311. It is recommended that the bq2083−V1P2 protection control be validated by two successive measurements by setting VOD=1 in *Misc Configuration*.

The bq29311 can detect and protect the load from an overcurrent (OC) or short circuit (SC). The bq29311 alerts the bq2083−V1P2 with the XALERT output when ever an overcurrent or short circuit threshold is breached in either the charge or discharge directions.

The bq2083−V1P2 asserts CVOV and instructs the bq29311 to turn off the charge FET if an Overvoltage or Overtemperature condition exists, or if AverageCurrent( ) ≥ *Fast-Charging Current + Over Current Margin* (Prolonged Overcurrent condition in Table 6). The bq2083−V1P2 does not turn off the charge FET if there is a discharge current > 50 mA. The bq2083−V1P2 instructs the bq29311 to turn on the charge FET when Overvoltage and Overtemperature conditions no longer exist, and AverageCurrent( ) < 256 mA (if Prolonged Overcurrent generated the fault condition).

The bq2083−V1P2 asserts CVUV and instructs the bq29311 to turn off the discharge FET if an Overdischarged condition exists, or if AverageCurrent( ) ≤ − overload current (Overload). The bq2083−V1P2 does not turn off the discharge FET if there is a charge current ≥ 50 mA. The bq2083−V1P2 instructs the bq29311 to turn on the discharge FET when the Overdischarged condition no longer exists and AverageCurrent( ) > −256 mA (if Overload generated the fault condition).

Table 10. bq2083−V1P2 to bq29311 Interface (FET Protection Control)

Battery State (Table 6)	DISCHARGING FET	CHARGING FET
CVOV = 1: Prolonged Overcurrent, Overvoltage, Overtemperature	Normal (see Note 1)	Off (see Note 2)
CVOV = CVUV = 0	Normal (see Note 1)	Normal (see Note 1)
CVUV = 1: Overload, Overdischarged	Off (see Note 3)	Normal (see Note 1)

(1) State determined by bq29311
(2) On if there is a discharge current ≥ 50 mA
(3) On if there is a charge current ≥50 mA.

Table 11. Stand-Alone bq29311 Protection Control

MODE	CONDITION	CLEAR (see Note 1)
Over Load	*AFE Over Curr Dsg* (DF 0xb2) is breached for *Over Curr Delay* (DF 0xb4)	AverageCurrent() = 0 mA
Over Current	AFE *Over Curr Chg* (DF 0x0b3) is breached for *Over Curr Delay* (DF 0xb4)	AverageCurrent() = 0 mA
Short Circuit, Discharge	*AFE Short Circ Thresh* (DF 0xb6) is breached for *AFE Short Circuit Delay* (DF 0xb7, lower nibble)	AverageCurrent() = 0 mA
Short Circuit, Charge	*AFE Short Circ Thresh* (DF 0xb6) is breached for *AFE Short Circuit Delay* (DF 0xb7, upper nibble)	AverageCurrent() = 0 mA

(1) Clear is detected and controlled by the bq2083−V1P2.

$\overline{\text{SAFE}}$ Output

The $\overline{\text{SAFE}}$ output of the bq2083−V1P2 provides an additional level of safety control. The active low safety output can blow a fuse or control another switch on the basis of temperature, pack-voltage cell-voltage, or an integrity check of the AFE registers.

The $\overline{\text{SAFE}}$ output is driven low in any of the following 4 conditions and if the $\overline{\text{SAFE}}$ output activates, the bq2083−V1P2 sets the SOV bit in pack status. SOV remains set until the bq2083−V1P2 is reset. The $\overline{\text{SAFE}}$ output can be pulled high (cleared) by a POR of the bq2083−V1P2 only.

$\overline{\text{SAFE}}$ activation conditions:

- When CVOV = 1 AND after a minimum of 1s Voltage() > *Safety Over Voltage* (DF 0x68 and 0x69), or
- When CVOV = 1 AND after a minimum of 1s the Temperature() > *Safety Temperature* (DF 0x6a and 0x6b)

- When Miscellaneous Configuration (0x2a) bit 5 AC is set, and the AFE has failed at least AFE Fail Times (DF 0xd3, d4)

The bq2083−V1P2 checks the programming of the AFE registers at a period determined by AFE Check Time DF 0xe4. The units of the check period are seconds unless the bq2083−V1P2 is in sleep mode, in which case the period is *AFE Check Time* x *Sleep Current Time* (DF 0xe7). If the data is not correct, the bq2083−V1P2 increments an internal counter.

The CVOV flag in PackStatus() (0x2f) is set in any of the following ways:

- Voltage() ≥ ChargingVoltage() + OverVoltageMargin (DF 0x5a and 0x5b)
- AverageCurrent() ≥ FastCurrent + OvercurrentMargin (DF 0x5c and 0x5d)
- Any cell voltage ≥ CellOverVoltage (DF 0x60 and 0x61)
- The BatteryStatus() Over temperature bit is set

An example circuit using the $\overline{\text{SAFE}}$ output to blow a fuse is shown in Figure 5.

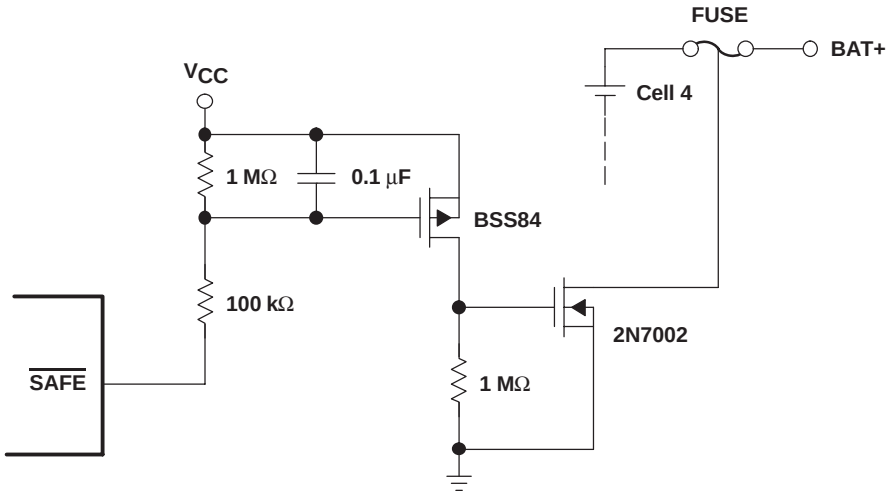

Figure 5. Example $\overline{\text{SAFE}}$ Circuit Implementation

Low-Power Modes

The bq2083−V1P2 enters sleep mode when the charge and discharge current is less than the threshold programmed in *Sleep Current Threshold* DF 0xe5, the SMBus lines are low for at least 2 s, and bit 4 of *Misc. Configuration* DF 0x2a is set to zero. The bq2083−V1P2 wakes up periodically to monitor voltage and temperature and to apply self-discharge adjustment. The sleep period is set in *Sleep Timer* DF 0xe7. The bq2083−V1P2 wakes up at a period set by *Sleep Current Time* DF 0xe6 to measure current. The bq2083−V1P2 comes out of sleep when the SMBus lines go high or if the current is greater than *Sleep Current Threshold*. A rising edge on SMBC or SMBD restores the bq2083−V1P2 to the full operating mode.

Reset Conditions

On power-up the entire IC is reset and data is loaded from Data Flash to configure the SBS Data and the system. On a partial reset (loss of VCC but RBI holds RAM valid) then a limited number of actions are taken.

These actions are the following:

- The AFE registers are rewritten.
- PackStatus() VDQ flag is cleared (the proposed change is not to clear VDQ).
- PackStatus() EDV2 flag is cleared.
- BatteryStatus() DISCHARGING flag is cleared.
- The charger and alarm broadcast period is set to 10 seconds between broadcasts.

Device Reset

The following procedure resets the bq2083−V1P2:

1. Write 0x653 to Address 0. (This puts the device in calibration mode.)
2. Write 0x000 to Address 5E. (This puts the device back into normal mode.)

NOTE: No other write actions should be attempted between step 1 and step 2.

COMMUNICATION

The bq2083−V1P2 includes an SMBus communication port. The SMBus interface is a 2-wire bidirectional protocol using the SMBC (clock) and SMBD (data) pins. The communication lines are isolated from VCC and may be pulled-up higher than V_{CC}. Also, the bq2083−V1P2 does not pull these lines low if V_{CC} to the part is zero.

The communication ports allow a host controller, an SMBus compatible device, or other processor to access the memory registers of the bq2083−V1P2. In this way a system can efficiently monitor and manage the battery.

SMBus

The SMBus interface is a command-based protocol. A processor acting as the bus master initiates communication to the bq2083−V1P2 by generating a start condition. A start condition consists of a high-to-low transition of the SMBD line while the SMBC is high. The processor then sends the bq2083−V1P2 device address of 0001011 (bits 7-1) plus a R/W bit (bit 0) followed by an SMBus command code. The R/W bit (LSB) and the command code instruct the bq2083−V1P2 to either store the forthcoming data to a register specified by the SMBus command code or output the data from the specified register. The processor completes the access with a stop condition. A stop condition consists of a low-to-high transition of the SMBD line while the SMBC is high. With SMBus, the most-significant bit (MSB) of a data byte is transmitted first.

In some instances, the bq2083−V1P2 acts as the bus master. This occurs when the bq2083−V1P2 broadcasts charging requirements and alarm conditions to device addresses 0x12 (SBS Smart Charger) and 0x10 (SBS Host Controller).

SMBus Protocol

The bq2083−V1P2 supports the following SMBus protocols:

- Read word
- Write word
- Block read

A processor acting as the bus master uses the three protocols to communicate with the bq2083−V1P2. The bq2083−V1P2 acting as the bus master uses the write word protocol.

The SMBD and SMBC pins are open drain and require external pullup resistors. A 1-MΩ pulldown resistor in the battery pack on SMBC and SMBD is required to assure the detection of the SMBus offstate, the performance of automatic offset calibration, and the initiation of the low-power sleep mode when the battery pack is removed.

SMBus Packet Error Checking

The bq2083−V1P2 supports packet error checking as a mechanism to confirm proper communication between it and another SMBus device. Packet error checking requires that both the transmitter and receiver calculate a packet error code (PEC) for each communication message. The device that supplies the last byte in the communication message appends the PEC to the message. The receiver compares the transmitted PEC to its PEC result to determine if there is a communication error.

PEC Protocol

The bq2083−V1P2 can receive or transmit data with or without PEC. Figure 6 shows the communication protocol for the read word, write word, and read block messages without PEC. Figure 7 includes PEC.

In the read word protocol, the bq2083−V1P2 receives the PEC after the last byte of data from the host. If the host does not support PEC, the last byte of data is followed by a stop condition. After receipt of the PEC, the bq2083−V1P2 compares the value to its calculation. If the PEC is correct, the bq2083−V1P2 responds with an ACKNOWLEDGE. If it is not correct, the bq2083−V1P2 responds with a NOT ACKNOWLEDGE and sets an error code.

In the write word and block read, the host generates an ACKNOWLEDGE after the last byte of data sent by the bq2083−V1P2. The bq2083−V1P2 then sends the PEC and the host acting as a master-receiver generates a NOT ACKNOWLEDGE and a stop condition.

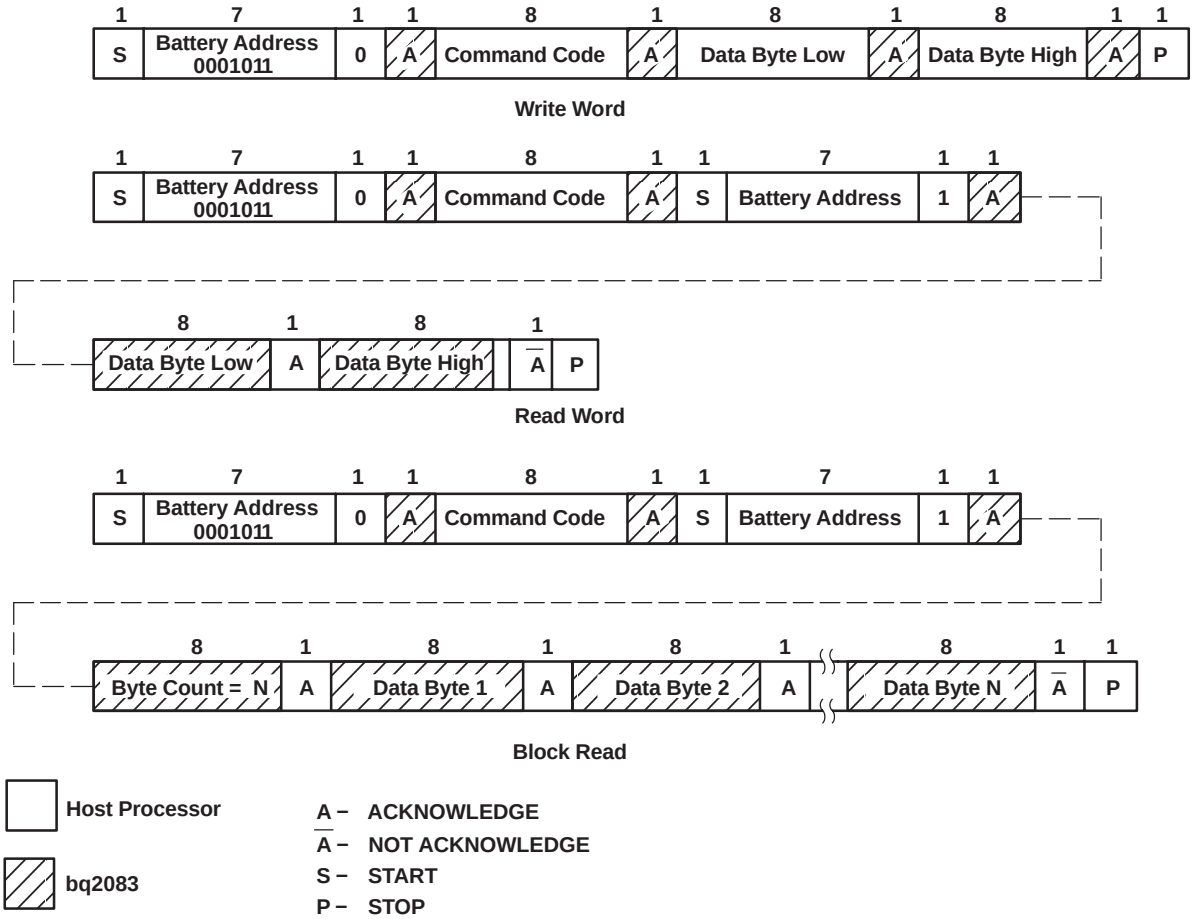

Figure 6. SMBus Communication Protocol Without PEC

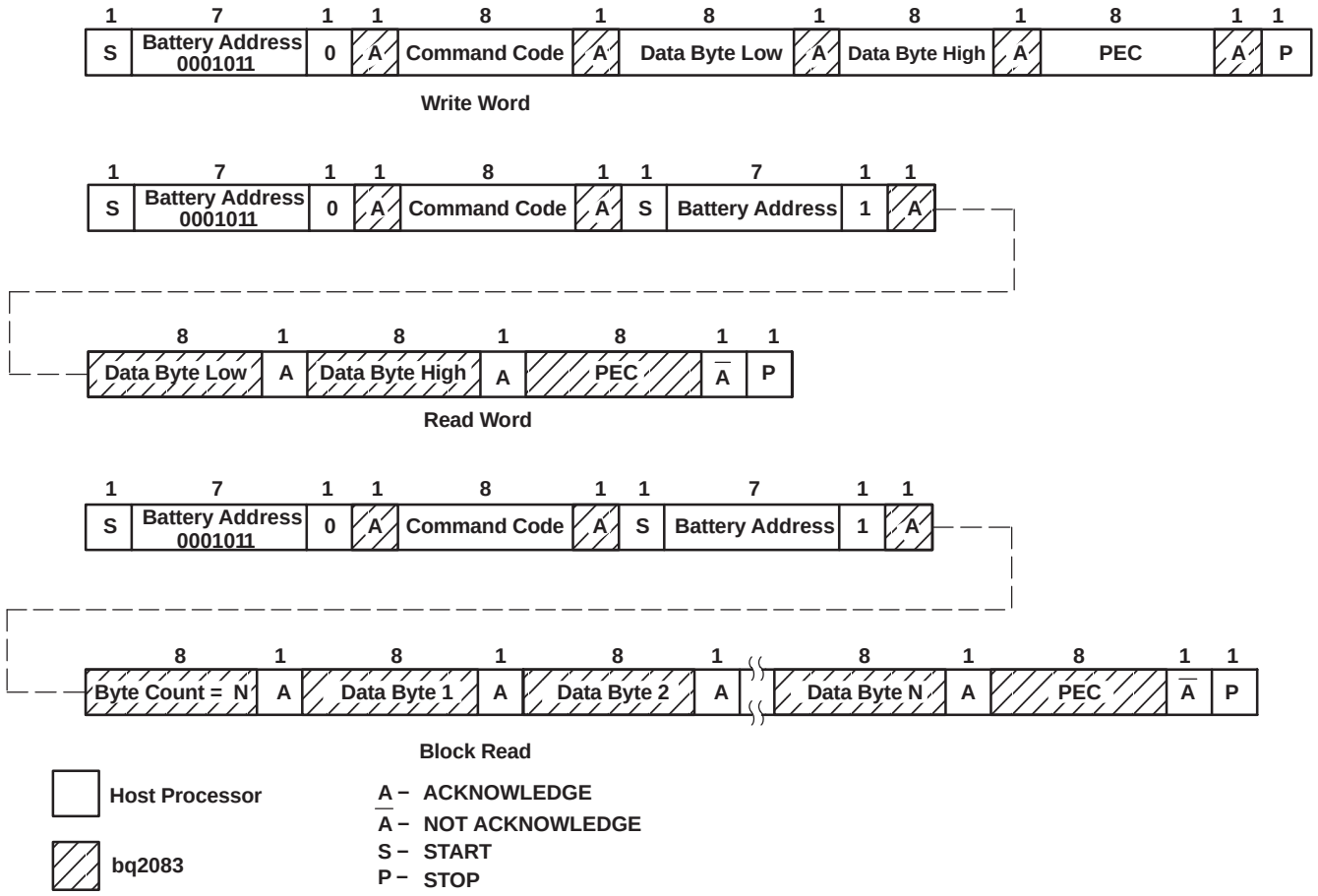

Figure 7. SMBus Communication Protocol With PEC

PEC Calculation

The basis of the PEC calculation is an 8-bit cyclic redundancy check (CRC-8) based on the polynomial C(X) = X8 + X2 + X1 + 1. The PEC calculation includes all bytes in the transmission, including address, command, and data. The PEC calculation does not include ACKNOWLEDGE, NOT ACKNOWLEDGE, start, stop, and repeated start bits.

For example, the host requests RemainingCapacity( ) from the bq2083−V1P2. This includes the host following the read word protocol. The bq2083−V1P2 calculates the PEC based on the following 5 bytes of data, assuming the remaining capacity of the battery is 1001 mAh.

- Battery Address with R/$\overline{W}$ = 0: 0x16
- Command Code for RemainingCapacity( ): 0x0f
- Battery Address with R/$\overline{W}$ = 1: 0x17
- RemainingCapacity( ): 0x03e9

For 0x160f17e903, the bq2083−V1P2 transmits a PEC of 0xe8 to the host.

PEC Enable in Master Mode

PEC for master mode broadcasts to the charger, host, or both can be enabled/disabled with the combination of the bits hpe and cpe in *Pack Configuration* DF 0x28.

SMBus On and Off State

The bq2083−V1P2 detects whether the SMBus enters the Off State by monitoring the SMBC and SMBD lines. When both signals are continually low for at least 2.0 s, the bq2083−V1P2 detects the Off State. When the SMBC and SMBD lines go high, the bq2083−V1P2 detects the On State and can begin communication within 1 ms. One-MΩ pulldown resistors on SMBC and SMBD are recommended for reliable Off State detection.

COMMAND CODES

The SMBus command codes are in ( ). Temperature( ), Voltage( ), Current( ), and AverageCurrent( ), performance specifications are at bq29311 regulated V_{CC} ($V_{(REG)}$) and a temperature of 0-70°C.

ManufacturerAccess( ) (0x00)

Description: This function provides writable command codes to control the bq2083−V1P2 during normal operation and pack manufacture. The following commands are available:

0x0001 Device Type instructs the bq2083−V1P2 to return the IC part number; i.e., 2083 (0823h) to Manufacture Access ( ) so it can be read.

0x0002 Firmware Revision instructs the bq2083−V1P2 to return the firmware revision.

0x0003 EDV Level instructs the bq2083−V1P2 to return the pending end-of-discharge voltage level so it can be read.

0x062b SEAL instructs the bq2083−V1P2 to restrict access to those functions listed in Table 3. The bq2083−V1P2 completes the seal function and clears ManufacturerAccess( ).

Once sealed, the device remains sealed, even after reset. There is no access to calibration, or the reading/writing of data flash. In addition, sealing inhibits write access to the protected SBS variables.

With an unsealed device, it may be useful to write to an SBS variable. For example, RemainingCapacity( ) (0x0f) is altered to match the actual state of charge.

Purpose: The ManufacturerAccess( ) function provides the system host access to bq2083−V1P2 functions that are not defined by the SBD.

SMBus protocol: Read or write word

Input/Output: Word

RemainingCapacityAlarm( ) (0x01)

Description: Sets or gets the low-capacity threshold value. Whenever the RemainingCapacity( ) falls below the low capacity value, the bq2083−V1P2 sends AlarmWarning( ) messages to the SMBus host with the REMAINING_CAPACITY_ALARM bit set. A low-capacity value of 0 disables this alarm. The bq2083−V1P2 initially sets the low-capacity value to *Remaining Capacity Alarm* value programmed in DF 0x02−0x03. The low-capacity value remains unchanged until altered by the RemainingCapacityAlarm( ) function. The low-capacity value may be expressed in either current (mA) or power (10 mWh) depending on the setting of the BatteryMode( ) CAPACITY_MODE bit.

Purpose: The RemainingCapacityAlarm( ) function can be used by systems that know how much power they require to save their operating state. It enables those systems to more finely control the point at which they transition into suspend state. The low-capacity value can be read to verify the value in use by the bq2083−V1P2 low-capacity alarm.

SMBus protocol: Read or write word

Input/Output: Unsigned integer-value below which Low Capacity messages are sent.

	BATTERY MODES	
	CAPACITY_MODE BIT = 0	**CAPACITY_MODE BIT = 1**
Units	mAh at C/5	10 mWh at P/5
Range	0–65,535 mAh	0–65,535 10 mWh
Granularity	Not applicable	
Accuracy	See RemainingCapacity( )	

RemainingTimeAlarm( ) (0x02)

Description: Sets or gets the *Remaining Time Alarm* value. Whenever the AverageTimeToEmpty( ) falls below the remaining time value, the bq2083−V1P2 sends AlarmWarning( ) messages to the SMBus host with the REMAINING_TIME_ALARM bit set. A remaining time value of 0 effectively disables this alarm. The bq2083−V1P2 initially sets the remaining time value to the *Remaining Time Alarm* value programmed in DF 0x00−0x01. The remaining time value remains unchanged until altered by the RemainingTimeAlarm( ) function.

Purpose: The RemainingTimeAlarm( ) function can be used by systems that want to adjust when the remaining time alarm warning is sent. The remaining time value can be read to verify the value in use by the bq2083−V1P2 RemainingTimeAlarm( ).

SMBus protocol: Read or write word

Input/Output: Unsigned integer—the point below which remaining time messages are sent.

Units: Minutes

Range: 0 to 65,535 minutes

Granularity: Not applicable

Accuracy: See AverageTimeToEmpty( ).

BatteryMode( ) (0x03)

Description: Selects the various battery operational modes and reports the battery's mode and requests.

Defined modes include

- Whether the battery capacity information is specified in units of mAh or 10 mWh (CAPACITY_MODE bit)
- Whether the ChargingCurrent( ) and ChargingVoltage( ) values are broadcast to the smart battery charger when the CHARGER_MODE bit is set.
- Whether all broadcasts to the smart battery charger and host are disabled

The defined request condition is the battery requesting a conditioning cycle (RELEARN_FLAG).

Purpose: The CAPACITY_MODE bit allows power management systems to best match their electrical characteristics with those reported by the battery. For example, a switching power supply represents a constant power load, whereas a linear supply is better represented by a constant current model. The CHARGER_MODE bit allows a SMBus host or smart battery charger to override the smart battery desired charging parameters by disabling the bq2083−V1P2 broadcasts. The RELEARN_FLAG bit allows the bq2083−V1P2 to request a conditioning cycle.

SMBus protocol: Read or write word

Input/Output: Unsigned integer—bit mapped— see below.

Units: Not applicable

Range: 0-1

Granularity: Not applicable

Accuracy: Not applicable

The BatteryMode( ) word is divided into two halves, the MSB (bits 8-15) which is read/write and the LSB (bits 0-7) which is read only. The bq2083−V1P2 forces bits 0-6 to zero and prohibits writes to bit 7.

Table 12 summarizes the meanings of the individual bits in the BatteryMode( ) word and specifies the default values, where applicable, are noted.

INTERNAL_CHARGE_CONTROLLER bit is not used by the bq2083−V1P2.

PRIMARY_BATTERY_SUPPORT bit is not used by the bq2083−V1P2.

RELEARN_FLAG bit set indicates that the bq2083−V1P2 is requesting a capacity relearn cycle for the battery. The bq2083−V1P2 sets the RELEARN_FLAG on a full reset and if it detects 20 cycle counts without an FCC update. The bq2083−V1P2 clears this flag after a learning cycle has been completed.

CHARGE_CONTROLLER_ENABLED bit is not used by the bq2083−V1P2. The bq2083−V1P2 forces this bit to zero.

PRIMARY_BATTERY bit is not used by the bq2083−V1P2. The bq2083−V1P2 forces this bit to zero.

Table 12. Battery Mode Bits and Values

Battery Mode( ) BITS	BITS USED	FORMAT	ALLOWABLE VALUES
INTERNAL_CHARGE_CONTROLLER	0	Read only bit flag	
PRIMARY_BATTERY_SUPPORT	1	Read only bit flag	
Reserved	2–6		
RELEARN_FLAG	7	Read only bit flag	0—Battery OK 1—Relearn cycle requested
CHARGE_CONTROLLER_ENABLED	8	R/W bit flag	
PRIMARY_BATTERY	9	R/W bit flag	
Reserved	10–12		
ALARM_MODE	13	R/W bit flag	0—Enable alarm broadcast (default) 1—Disable alarm broadcast
CHARGER_MODE	14	R/W bit flag	0—Enable charging broadcast (default) 1—Disable charging broadcast
CAPACITY_MODE	15	R/W bit flag	0—Report in mA or mAh (default) 1—Report in 10mW or 10 mWh

ALARM_MODE bit is set to disable the bq2083−V1P2's ability to master the SMBus and send AlarmWarning( ) messages to the SMBus host and the smart battery charger. When set, the bq2083−V1P2 does *not* master the SMBus, and AlarmWarning( ) messages are not sent to the SMBus host and the smart battery charger for a period of no more than 60 seconds and no less than 59 seconds. When cleared (default), the smart battery sends the AlarmWarning( ) messages to the SMBus host and the smart battery charger any time an alarm condition is detected.

- The ALARM broadcast does not occur more often than once every 10 s. Whenever the BATTERY_MODE command is received, the bq2083−V1P2 resets the bit and starts or restarts a 60-seconds (nominal) timer. After the timer expires, the bq2083−V1P2 automatically enables alarm broadcasts to ensure that the accidental deactivation of broadcasts does not persist. An SMBus host that does not want the bq2083−V1P2 to be a master on the SMBus must therefore continually set this bit at least once per 59 seconds to keep the bq2083−V1P2 from broadcasting alarms.
- The ALARM_MODE bit defaults to a cleared state when the bq2083−V1P2 enters SLEEP mode.
- The condition of the ALARM-MODE bit does *not* affect the operation or state of the CHARGER_MODE bit, which is used to prevent broadcasts of ChargingCurrent( ) and ChargingVoltage( ) to the smart battery charger.

CHARGER_MODE bit enables or disables the bq2083−V1P2's transmission of ChargingCurrent( ) and ChargingVoltage( ) messages to the smart battery charger. When set, the bq2083−V1P2 does *not* transmit ChargingCurrent( ) and ChargingVoltage( ) values to the smart battery charger. When cleared, the bq2083−V1P2 transmits the ChargingCurrent( ) and ChargingVoltage( ) values to the smart battery charger. The CHARGER_MODE bit defaults to a cleared state when the bq2083−V1P2 enters SLEEP mode.

CAPACITY_MODE bit indicates if capacity information is reported in mA/mAh or 10mW/10 mWh. When set, the bq2083−V1P2 reports capacity information in 10 mW/10 mWh as appropriate. When cleared, the bq2083−V1P2 reports capacity information in mA/mAh as appropriate. The CAPACITY_MODE bit defaults to a cleared state when the bq2083−V1P2 enters SLEEP mode.

The following functions are changed to accept or return values in mA/mAh or 10 mW/10 mWh depending on the CAPACITY_MODE bit:

- RemainingCapacityAlarm( )
- AtRate( )
- RemainingCapacity( )
- FullChargeCapacity( )
- DesignCapacity( )

The following functions are calculated on the basis of capacity and may be calculated differently depending on the CAPACITY_MODE bit:

- AtRateOK( )
- AtRateTimeToEmpty( )
- AtRateTimeToFull( )
- RunTimeToEmpty( )
- AverageTimeToEmpty( )
- AverageTimeToFull( )
- Remaining Time Alarm( )
- BatteryStatus( )

The bq2083−V1P2 updates the non-AtRate related register values within 1 s of changing the state of the CAPACITY_MODE bit. The AtRate( ) values are updated after the next AtRate value is written to the bq2083−V1P2 (or after the next 1 s scheduled refresh calculation).

AtRate( ) (0x04)

Description: The AtRate( ) function is the first half of a two-function call-set used to set the AtRate value used in calculations made by the AtRateTimeToFull( ), AtRateTimeToEmpty( ), and AtRateOK( ) functions. The AtRate value may be expressed in either current (mA) or power (10 mW) depending on the setting of the BatteryMode( ) CAPACITY_MODE bit.

Purpose: Since the AtRate( ) function is the first half of a two-function call-set, it is followed by the second function of the call-set that calculates and returns a value based on the AtRate value and the battery's present state.

- When the AtRate( ) value is positive, the AtRateTimeToFull( ) function returns the predicted time to full-charge at the AtRate value of charge.
- When the AtRate( ) value is negative, the AtRateTimeToEmpty( ) function returns the predicted operating time at the AtRate value of discharge.
- When the AtRate( ) value is negative, the AtRateOK( ) function returns a boolean value that predicts the battery's ability to supply the AtRate value of *additional* discharge energy (current or power) for 10 seconds.

The default value for AtRate( ) is zero.

SMBus protocol: Read or write word

Input/Output: Signed integer-charge or discharge; the AtRate( ) value is positive for charge, negative for discharge, and zero for neither (default).

	BATTERY MODES	
	CAPACITY_MODE BIT = 0	**CAPACITY_MODE BIT = 1**
Units	mA	10 mW
Charge range	1 to 32,767 mA	1 to 32,767 10 mW
Discharge range	−1 to −32,768 mA	−1 to −32,768 10 mW
Granularity	1 Unit	
Accuracy	NA	

AtRateTimeToFull( ) (0x05)

Description: Returns the predicted remaining time to fully charge the battery at the AtRate( ) value (mA).

Purpose: The AtRateTimeToFull( ) function is part of a two-function call-set used to determine the predicted remaining charge time at the AtRate value in mA. The bq2083−V1P2 updates AtRateTimeToFull( ) within 5 ms after the SMBus host sets the AtRate value. The bq2083−V1P2 automatically updates AtRateTimeToFull( ) based on the AtRate( ) value every 1 s.

SMBus protocol: Read word

Output: Unsigned integer—predicted time in minutes to fully charge the battery.

Units: Minutes

Range: 0 to 65,534 min

Granularity: 2 min or better

Accuracy: ± MaxError( ) * FullChargeCapacity( )/|AtRate( )|

Invalid Data Indication: 65,535 indicates the AtRate ≤ 0.

AtRateTimeToEmpty( ) (0x06)

Description: Returns the predicted remaining operating time if the battery is discharged at the AtRate( ) value.

Purpose: The AtRateTimeToEmpty( ) function is part of a two-function call-set used to determine the remaining operating time at the AtRate( ) value. The bq2083−V1P2 updates AtRateTimeToEmpty( ) within 5 ms after the SMBus host sets the AtRate( ) value. The bq2083−V1P2 automatically updates AtRateTimeToEmpty( ) based on the AtRate( ) value every 1 s.

SMBus protocol: Read word

Output: Unsigned integer—estimated operating time left.

Units: Minutes

Range: 0 to 65,534 min

Granularity: 2 min or better

Accuracy: -0,+MaxError( ) × FullChargeCapacity/|AtRate( )|

Invalid Data Indication: 65,535 indicates AtRate ≥ 0.

AtRateOK( ) (0x07)

Description: Returns a boolean value that indicates whether or not the battery can deliver the AtRate( )value of *additional* energy for 10 seconds. If the AtRate value is zero or positive, the AtRateOK( ) function always returns OK (logic 1).

Purpose: The AtRateOK( ) function is part of a two-function call-set used by power management systems to determine if the battery can safely supply enough energy for an additional load. The bq2083−V1P2 updates AtRateOK( ) within 5 ms after the SMBus host sets the AtRate( ) value. The bq2083−V1P2 automatically updates AtRateOK( ) based on the At Rate( ) value every 1 second.

SMBus protocol: Read word

Output: Boolean—indicates if the battery can supply the *additional* energy requested.

Units: Boolean

Range: 1, 0

Granularity: Not applicable

Accuracy: Not applicable

Temperature( ) (0x08)

Description: Returns the temperature (K) measured by the bq2083−V1P2.

Purpose: The Temperature( ) function provides accurate cell temperatures for use by battery chargers and thermal management systems. A battery charger can use the temperature as a safety check. Thermal management systems may use the temperature because the battery is one of the largest thermal sources in a system.

SMBus protocol: Read word

Output: Unsigned integer—cell temperature in tenth-degree Kelvin increments.

Units: 0.1°K

Range: 0 to +6553.5°K (real range)

Granularity: 0.1°K

Accuracy: ±1.5°K (from ideal Semitec 103AT thermistor performance, after calibration)

Voltage( ) (0x09)

Description: Returns the cell-pack voltage (mV).

Purpose: The Voltage( ) function provides power management systems with an accurate battery terminal voltage. Power management systems can use this voltage, along with battery current information, to characterize devices they control. This ability helps enable intelligent, adaptive power-management systems.

SMBus protocol: Read word

Output: Unsigned integer—battery terminal voltage in mV.

Units: mV

Range: 0 to 20,000 mV

Granularity: 1 mV

Accuracy: ±0.25% (after calibration)

Current( ) (0x0a)

Description: Returns the current being supplied (or accepted) by the battery (mA).

Purpose: The Current( ) function provides a snapshot for the power management system of the current flowing into or out of the battery. This information is of particular use in power-management systems because they can characterize individual devices and tune their operation to actual system power behavior.

SMBus protocol: Read word

Output: Signed integer—charge/discharge rate in mA increments-positive for charge, negative for discharge.

Units: mA

Range: −32,768 to 32,767 mA

Granularity: 1 mA

Accuracy: 0.25% or 5 mA, whichever is greater

AverageCurrent( ) (0x0b)

Description: Returns a value that approximates a one-minute rolling average of the current being supplied (or accepted) through the battery terminals (mA). The AverageCurrent( ) function returns values equivalent to Current( ) during the battery's first minute of operation.

Purpose: The AverageCurrent( ) function provides the average current flowing into or out of the battery for the power management system.

SMBus protocol: Read word

Output: Signed integer—charge/discharge rate in mA increments-positive for charge, negative for discharge.

Units: mA

Range: −32,768 to 32,767 mA

Granularity: 1 mA

Accuracy: 0.25% or 5 mA, whichever is greater

MaxError( ) (0x0c)

Description: Returns the expected margin of error (%) in the state of charge calculation. For example, when MaxError( ) returns 10% and RelativeStateOfCharge( ) returns 50%, the Relative StateOfCharge( ) is more likely between 50% and 60%. The bq2083−V1P2 sets MaxError( ) to 100% on a full reset. The bq2083−V1P2 sets MaxError( ) to 2% on completion of a learning cycle, unless the bq2083−V1P2 limits the learning cycle to the +512/-256 mAh maximum adjustment values. If the learning cycle is limited, the bq2083−V1P2 sets MaxError( ) to 8% unless MaxError( ) was already below 8%. In this case MaxError( ) does not change. The bq2083−V1P2 increments MaxError( ) by 1% after four increments of CycleCount( ) without a learning cycle.

If voltage-based corrections are applied to the coulomb counter, MaxError( ) is set to 25%.

Purpose: The MaxError( ) function has real value in two ways: first, to give the user a confidence level about the state of charge and second, to give the power management system information about how aggressive it should be, particularly as the battery nears the end of its life.

SMBus protocol: Read word

Output: Unsigned integer—percent uncertainty for selected information.

Units: %

Range: 2–100%

Granularity: 1%

Accuracy: Not applicable

RelativeStateOfCharge( ) (0x0d)

Description: Returns the predicted remaining battery capacity expressed as a percentage of FullChargeCapacity( ) (%).

Purpose: The RelativeStateOfCharge( ) function is used to estimate the amount of charge remaining in the battery relative to the last learned capacity.

SMBus protocol: Read word

Output: Unsigned integer-percent of remaining capacity.

Units: %

Range: 0–100%

Granularity: 1%

Accuracy: -0, +MaxError( )

AbsoluteStateOfCharge( )(0x0e)

Description: Returns the predicted remaining battery capacity expressed as a percentage of DesignCapacity( ) (%). Note that AbsoluteStateOfCharge( ) can return values greater than 100%.

Purpose: The AbsoluteStateOfCharge( ) function is used to estimate the amount of charge remaining in the battery relative to the nominal or DesignCapacity( ).

SMBus protocol: Read word

Output: Unsigned integer—percent of remaining capacity.

Units: %

Range: 0–100+%

Granularity: 1%

Accuracy: -0, +MaxError( )

RemainingCapacity( ) (0x0f)

Description: Returns the predicted charge or energy remaining in the battery. The RemainingCapacity( ) value is expressed in either charge or energy, depending on the setting of the BatteryMode( ) CAPACITY_MODE bit.

Purpose: The RemainingCapacity( ) function returns the battery's remaining capacity. This information is a numeric indication of remaining charge or energy given by the Absolute or Relative StateOfCharge( ) functions and may be in a better form for use by power management systems.

SMBus protocol: Read word

Output: Unsigned integer—remaining charge in units of mAh or 10 mWh.

	BATTERY MODES	
	CAPACITY_MODE BIT = 0	**CAPACITY_MODE BIT = 1**
Units	mAh	10 mWh
Range	0–65,535mAh	0–65,535 10 mWh
Granularity	mAh	10 mWh
Accuracy	−0, +MaxError( ) ∗ FullCharageCapacity( )	

FullChargeCapacity( ) (0x10)

Description: Returns the predicted pack capacity when it is fully charged. The FullChargeCapacity( ) value is expressed in either current (mAh at a C/5 discharge rate) or power (10 mWh at a P/5 discharge rate) depending on the setting of the BatteryMode( ) CAPACITY_MODE bit.

Purpose: The FullChargeCapacity( ) function provides a means of understanding the tank size of the battery. This information, along with information about the original capacity of the battery, indicates battery wear.

SMBus protocol: Read word

Output: Unsigned integer—estimated full-charge capacity in units of mAh or 10 mWh.

	BATTERY MODES	
	CAPACITY_MODE BIT = 0	**CAPACITY_MODE BIT = 1**
Units	mAh	10 mWh
Range	0–65,535 mAh	0–65,535 10 mWh
Granularity	mAh	10 mWh
Accuracy	−0, +MaxError( ) ∗ FullCharageCapacity( )	

RunTimeToEmpty( ) (0x11)

Description: Returns the predicted remaining battery life at the present rate of discharge (minutes). The RunTimeToEmpty( ) value is calculated based on either current or power depending on the setting of the BatteryMode( ) CAPACITY_MODE bit.

Purpose: The RunTimeToEmpty( ) provides the power management system with information about the relative gain or loss in remaining battery life in response to a change in power policy. This information is **not** the same as the AverageTimeToEmpty( ), which is not suitable to determine the effects that result from a change in power policy.

SMBus protocol: Read word

Output: Unsigned integer—minutes of operation left.

Units: Minutes

Range: 0 to 65,534 min

Granularity: 2 min or better

Accuracy: −0, +MaxError( ) ∗ FullChargeCapacity( ) / Current( )

Invalid Data Indication: 65,535 indicates battery is not being discharged.

AverageTimeToEmpty( ) (0x12)

Description: Returns a one-minute rolling average of the predicted remaining battery life (minutes). The AverageTimeToEmpty( ) value is calculated based on either current or power depending on the setting of the BatteryMode( ) CAPACITY_MODE bit.

Purpose: The AverageTimeToEmpty( ) displays state-of-charge information in a more useful way. It averages the instantaneous estimations so the remaining time does not appear to jump around.

SMBus protocol: Read word

Output: Unsigned integer—minutes of operation left.

Units: Minutes

Range: 0 to 65,534 min

Granularity: 2 min or better

Accuracy: −0, +MaxError( ) * FullChargeCapacity( ) / AverageCurrent( )

Invalid Data Indication: 65,535 indicates battery is not being discharged.

AverageTimeToFull( ) (0x13)

Description: Returns a one-minute rolling average of the predicted remaining time until the battery reaches full charge (minutes).

Purpose: The AverageTimeToFull( ) function can be used by the SMBus host's power management system to aid in its policy. It may also be used to find out how long the system must be left on to achieve full charge.

SMBus protocol: Read word

Output: Unsigned integer—remaining time in minutes.

Units: Minutes

Range: 0 to 65,534 minutes

Granularity: 2 minutes or better

Accuracy: −0, +MaxError( ) * FullChargeCapacity( ) / AverageCurrent( )

Invalid Data Indication: 65,535 indicates the battery is not being charged.

ChargingCurrent( ) (0x14)

Description: Returns the desired charging rate in mA.

Purpose: The ChargingCurrent( ) function sets the maximum charge current of the battery. The ChargingCurrent( ) value should be used in combination with the ChargingVoltage( ) value to set the charger's operating point. Together, these functions permit the bq2083−V1P2 to dynamically control the charging profile (current/voltage) of the battery. The bq2083−V1P2 can effectively turn off a charger by returning a value of 0 for this function. The charger may be operated as a constant-voltage source above its maximum regulated current range by returning a ChargingCurrent( ) value of 65,535.

SMBus protocol: Read word

Output: Unsigned integer—maximum charger output current in mA.

Units: mA

Range: 0 to 65,535 mA

Granularity: 1 mA

Accuracy: Not applicable

Invalid Data Indication: 65,535 indicates that a charger should operate as a voltage source outside its maximum regulated current range.

ChargingVoltage( ) (0x15)

Description: Returns the desired charging voltage in mV.

Purpose: The ChargingVoltage( ) function sets the maximum charge voltage of the battery. The ChargingVoltage( ) value should be used in combination with the ChargingCurrent( ) value to set the charger's operating point. Together, these functions permit the bq2083−V1P2 to dynamically control the charging profile (current/voltage) of the battery. The charger may be operated as a constant-current source above its maximum regulated voltage range by returning a ChargingVoltage( ) value of 65,535.

SMBus protocol: Read word

Output: Unsigned integer—charger output voltage in mV.

Units: mV

Range: 0 to 65,535 mV

Granularity: 1mV

Accuracy: Not applicable

Invalid Data Indication: 65,535 indicates the charger should operate as a current source outside its maximum regulated voltage range.

BatteryStatus( ) (0x16)

Description: Returns the bq2083−V1P2 status word (flags). Some of the BatteryStatus( ) flags (REMAINING_CAPACITY_ALARM and REMAINING_TIME_ALARM) are calculated on the basis of either current or power depending on the setting of the BatteryMode( ) CAPACITY_MODE bit. This is important because use of the wrong calculation mode may result in an inaccurate alarm.

Purpose: The BatteryStatus( ) function is used by the power-management system to get alarm and status bits, as well as error codes from the bq2083−V1P2. This is basically the same information broadcast to both the SMBus host and the smart battery charger by the AlarmWarning( ) function except that the AlarmWarning( ) function sets the error code bits all high before sending the data.

SMBus protocol: Read word

Output: Unsigned Integer-Status Register with Alarm Conditions Bit Mapped as follows:

ALARM BITS	
0x8000	OVER_CHARGED_ALARM
0x4000	TERMINATE_CHARGE_ALARM
0x2000	Reserved
0x1000	OVER_TEMP_ALARM
0x0800	TERMINATE_DISCHARGE_ALARM
0x0400	Reserved
0x0200	REMAINING_CAPACITY_ALARM
0x0100	REMAINING_TIME_ALARM
STATUS BITS	
0x0080	Initialized
0x0040	DISCHARGING
0x0020	FULLY_CHARGED
0x0010	FULLY_DISCHARGED
ERROR CODES	
0x0007	Unknown Error
0x0006	BadSize
0x0005	Overflow/Underflow
0x0004	AccessDenied
0x0003	UnsupportedCommand
0x0002	ReservedCommand
0x0001	Busy
0x0000	OK

Alarm Bits

OVER_CHARGED_ALARM bit is set whenever the bq2083−V1P2 detects that the battery is being charged beyond the maximum overcharge limit. This bit is cleared when the bq2083−V1P2 detects that the battery is no longer being charged and there are 2 mAh of continuous discharge (i.e., the bq2083−V1P2 detects discharge activity or no activity above the digital filter).

TERMINATE_CHARGE_ALARM bit is set when the bq2083−V1P2 detects that one or more of the battery charging parameters are out of range (e.g., its voltage, current, or temperature is too high) or when the bq2083−V1P2 detects a primary charge termination. This bit is cleared when the parameter falls back into the allowable range, the termination condition ceases, or when the bq2083−V1P2 detects that the battery is no longer being charged.

OVER_TEMP_ALARM bit is set when the bq2083−V1P2 detects that the internal battery temperature is greater than or equal to the *Max Temperature* threshold. This bit is cleared when the internal temperature falls back into the acceptable range.

TERMINATE_DISCHARGE_ALARM bit is set when any of the following are true: RM = 0, Voltage( ) ≤ *Terminate Voltage*, or the CVUV bit in pack status is set indicating that a Li-Ion cell voltage has dropped below the limit programmed in *Cell Under Voltage*. The bit is cleared when all of the following are true: Voltage( ) > *Terminate Voltage*, RM( ) > 0, and the CVUV bit is cleared.

REMAINING_CAPACITY_ALARM bit is set when the bq2083−V1P2 detects that RemainingCapacity( ) is less than that set by the RemainingCapacityAlarm( ) function. This bit is cleared when either the value set by the RemainingCapacityAlarm( ) function is lower than the RemainingCapacity( ) or when the RemainingCapacity( ) is increased by charging.

REMAINING_TIME_ALARM bit is set when the bq2083−V1P2 detects that the estimated remaining time at the present discharge rate is less than that set by the RemainingTimeAlarm( ) function. This bit is cleared when either the value set by the RemainingTimeAlarm( ) function is lower than the AverageTimeToEmpty( ) or when the AverageTimeToEmpty( ) is increased by charging.

Status Bits

The initialized bit is set when the bq2083−V1P2 is has detected a valid load of data flash at full or partial reset. It is cleared when the bq2083−V1P2 detects an improper data flash load.

DISCHARGING bit is set when the bq2083−V1P2 determines that the battery is not being charged. This bit is cleared when the bq2083−V1P2 detects that the battery is being charged.

FULLY_CHARGED bit is set when the bq2083−V1P2 detects a primary charge termination or an Overcharge condition. It is cleared when RelativeStateOfCharge( ) is less than the programmed *Fully Charged Clear %* in DF 0x47.

FULLY_DISCHARGED bit is set when Voltage( ) or VCELL is less than the EDV2 threshold and Current( ) < *Overload Current* or when RelativeStateOfCharge( ) < *Battery Low %*. This bit is cleared when RelativeStateOfCharge( ) is greater than or equal to 20%.

Error Codes

ERROR CODES	DESCRIPTION
OK	The bq2083−V1P2 processed the function code without detecting any errors.
Busy	The bq2083−V1P2 is unable to process the function code at this time.
Reserved	The bq2083−V1P2 detected an attempt to read or write to a function code reserved by this version of the specification. The bq2083−V1P2 detected an attempt to access an unsupported optional manufacturer function code.
Unsupported	The bq2083−V1P2 does not support this function code which is defined in this version of the specification.
AccessDenied	The bq2083−V1P2 detected an attempt to write to a read-only function code.
Over/Underflow	The bq2083−V1P2 detected a data overflow or underflow.
BadSize	The bq2083−V1P2 detected an attempt to write to a function code with an incorrect data block.
UnknownError	The bq2083−V1P2 detected an unidentifiable error.

CycleCount( )(0x17)

Description: Returns the number of cycles the battery has experienced. The mAh value of each count is determined by programming the *Cycle Count Threshold* value in DF 0x37-0x38. The bq2083−V1P2 saves the cycle count value to *Cycle Count* DF 0x0c-0x0d after an update to CycleCount( ).

Purpose: The CycleCount( ) function provides a means to determine the battery wear. It may be used to give advance warning that the battery is nearing its end of life.

SMBus protocol: Read word

Output: Unsigned integer—count of total charge removed from the battery over its life.

Units: cycle

Range: 0 to 65,534 cycles; 65,535 indicates battery has experienced 65,535 or more cycles.

Granularity: 1 cycle

Accuracy: Absolute count

DesignCapacity( ) (0x18)

Description: Returns the theoretical or nominal capacity of a new pack. The DesignCapacity( ) value is expressed in either current (mAh at a C/5 discharge rate) or power, (10 mWh at a P/5 discharge rate) depending on the setting of the BatteryMode( ) CAPACITY_MODE bit.

Purpose: The DesignCapacity( ) function is used by the SMBus host's power management in conjunction with FullChargeCapacity( ) to determine battery wear. The power management system may present this information to the user and also adjust its power policy as a result.

SMBus protocol: Read word

Output: Unsigned integer—battery capacity in units of mAh or 10 mWh.

	BATTERY MODES	
	CAPACITY_MODE BIT = 0	CAPACITY_MODE BIT = 1
Units	mAh	10 mWh
Range	0–65,535 mAh	0–65,535 10 mWh
Granularity	Not applicable	Not applicable
Accuracy	Not applicable	Not applicable

DesignVoltage( ) (0x19)

Description: Returns the theoretical voltage of a new pack (mV). The bq2083−V1P2 sets DesignVoltage( ) to the value programmed in *Design Voltage* DF 0x04−0x05.

Purpose: The DesignVoltage( ) function can be used to give additional information about a particular smart battery expected terminal voltage.

SMBus protocol: Read word

Output: Unsigned integer—the battery's designed terminal voltage in mV

Units: mV

Range: 0 to 65,535 mV

Granularity: Not applicable

Accuracy: Not applicable

SpecificationInfo( ) (0x1a)

Description: Returns the version number of the smart battery specification the battery pack supports, as well as voltage and current scaling information in a packed unsigned integer. Power scaling is the product of the voltage scaling times the current scaling. The SpecificationInfo is packed in the following fashion:

(SpecID_H * 0x10 + SpecID_L) + (VScale + IPScale * 0x10) * 0x100.

The bq2083−V1P2 VScale (voltage scaling) and IPScale (current scaling) should always be set to zero. The bq2083−V1P2 sets SpecificationInfo( ) to the value programmed in *Specification Information* DF 0x06-0x07.

Purpose: The SpecificationInfo( ) function is used by the SMBus host's power management system to determine what information the smart battery can provide.

SMBus protocol: Read word

Output: Unsigned integer—packed specification number and scaling information:

FIELD	BITS USED	FORMAT	ALLOWABLE VALUES
SpecID_L	0...3	4-bit binary value	0–15
SpecID_H	4...7	4-bit binary value	0–15
VScale	8...11	4-bit binary value	0 (multiplies voltage by 10^ VScale)
IPScale	12...15	4-bit binary value	0 (multiplies current by 10 ^ IPScale)

ManufactureDate( ) (0x1b)

Description: This function returns the date the cell pack was manufactured in a packed integer. The date is packed in the following fashion: (year-1980) * 512 + month * 32 + day. The bq2083−V1P2 sets ManufactureDate( ) to the value programmed in *Manufacture Date* DF 0x08−0x09.

Purpose: The ManufactureDate( ) provides the system with information that can be used to uniquely identify a particular battery pack when used in conjunction with SerialNumber( ).

SMBus protocol: Read word

Output: Unsigned integer—packed date of manufacture.

FIELD	BITS USED	FORMAT	ALLOWABLE VALUES
Day	0...4	5-bit binary value	0–31 (corresponds to date)
Month	5...8	4-bit binary value	1–12 (corresponds to month number)
Year	9...15	7-bit binary value	0−127 (corresponds to year biased by 1980)

SerialNumber( ) (0x1c)

Description: This function is used to return a serial number. This number, when combined with the ManufacturerName( ), the DeviceName( ), and the ManufactureDate( ), uniquely identifies the battery (unsigned integer). The bq2083−V1P2 sets SerialNumber( ) to the value programmed in *Serial Number* DF 0x0a−0x0b.

Purpose: The SerialNumber( ) function can be used to identify a particular battery. This may be important in systems that are powered by multiple batteries where the system can log information about each battery that it encounters.

SMBus protocol: Read word
Output: Unsigned integer

ManufacturerName( ) (0x20)

Description: This function returns a character array containing the battery manufacturer's name. For example, MyBattCo identifies the smart battery manufacturer as MyBattCo. The bq2083−V1P2 sets ManufacturerName( ) to the value programmed in *Manufacturer Name Length* DF 0x0e−0x19.

Purpose: The ManufacturerName( ) function returns the name of the smart battery manufacturer. The manufacturer's name can be displayed by the SMBus host's power management system display as both an identifier and as an advertisement for the manufacturer. The name is also useful as part of the information required to uniquely identify a battery.

SMBus protocol: Read block

Output: String—character string with maximum length of 11 characters (11 + length byte).

DeviceName( ) (0x21)

Description: This function returns a character string that contains the battery name. For example, a DeviceName( ) of bq2083−V1P2 indicates that the battery is a model bq2083−V1P2. The bq2083−V1P2 sets DeviceName( ) to the value programmed in *Device Name Length* DF 0x1a-0x21.

Purpose: The DeviceName( ) function returns the battery name for identification purposes.

SMBus protocol: Read block

Output: String—character string with maximum length of 7 characters (7 + length byte).

DeviceChemistry( ) (0x22)

Description: This function returns a character string that contains the battery chemistry. For example, if the DeviceChemistry( ) function returns *NiMH*, the battery pack contains nickel metal hydride cells. The bq2083−V1P2 sets DeviceChemistry( ) to the value programmed in *Device Chemistry Length* DF 0x22−0x26.

Purpose: The DeviceChemistry( ) function gives cell chemistry information for use by charging systems. The bq2083−V1P2 does not use DeviceChemisty( ) values for internal charge control or fuel gauging.

SMBus protocol: Read block
Output: String—character string with maximum length of 4 characters (4 + length byte).

The following is a partial list of chemistries and their expected abbreviations. These abbreviations are *not* case sensitive.

Lead acid	PbAc
Lithium ion	LION
Nickel cadmium	NiCd
Nickel metal hydride	NiMH
Nickel zinc	NiZn
Rechargeable alkaline-manganese	RAM
Zinc air	ZnAr

The ManufacturerData( ) (0x23)

Description: This function allows access to the manufacturer data contained in the battery (data). The bq2083−V1P2 stores seven critical operating parameters in this data area.

Purpose: The ManufacturerData( ) function may be used to access the manufacturer's data area. The data fields of this command reflect the programming of eight critical data flash locations and can be used to facilitate evaluation of the bq2083−V1P2 under various programming sets. The ManufacturerData( ) function returns the following information in order: *Pack Configuration, Gauge Configuration, Misc Configuration, Digital Filter, Self Discharge Rate, Pack Load Estimate, Battery Low%, and Near Full* (2 bytes) AFE Status, and the pending EDV threshold voltage (low byte and high byte).

SMBus protocol: Read block

Output: Block data—data that reflects data flash programming as assigned by the manufacturer with maximum length of 13 characters (12 + length byte).

Pack Status and Pack Configuration (0x2f)

This function returns the pack status and pack configuration registers. The pack status register contains a number of status bits relating to bq2083−V1P2 operation. The pack status register is the least significant byte of the word.

The pack configuration register reflects how the bq2083−V1P2 is configured as defined by the value programmed in *Pack Configuration* in DF 0x28.

The pack status register consists of the following bits:

b7	b6	b5	b4	b3	b2	b1	b0
AFE	EDV2	SS	VDQ	0	SOV	CVOV	CVUV

AFE

The AFE bit indicates whether the bq29311 RAM integrity check has failed.

0 bq29311 integrity check passed
1 bq29311 integrity check failed

EDV2

The EDV2 bit indicates that pack or cell voltage (program option) is less than the EDV2 threshold.

0 Voltage > EDV2 threshold (discharging)
1 Voltage ≤ EDV2 threshold

SS

The SS bit indicates the seal state of the bq2083−V1P2.

0 The bq2083−V1P2 is in the unsealed state.
1 The bq2083−V1P2 is in the sealed state.

VDQ

The VDQ bit indicates if the present discharge cycle is valid for an FCC update.

0 Discharge cycle not valid
1 Discharge cycle valid

SOV

The SOV bit indicates that the safety output limits have been exceeded. Once set, the flag stays set until the bq2083−V1P2 is reset.

0 Safety limits not exceeded
1 Safety limits exceeded

CVOV

The CVOV bit indicates that a protection limit has been exceeded. It is set on a Prolonged Overcurrent, Overvoltage, or Overtemperature condition. The bit is not latched and merely reflects the present fault status.

0 No secondary protection limits exceeded
1 A secondary protection limit exceeded

CVUV

The CVUV bit indicates that a protection limit has been exceeded. It is set on an overload or overdischarge condition. The bit is not latched and merely reflects the present fault status.

0 No secondary protection limits exceeded
1 A secondary protection limit exceeded

VCELL4-VCELL1 (0x3c-0x3f)

These functions return the calculated individual cell voltages in mV.

DATA FLASH

General

The bq2083−V1P2 accesses the internal data flash during reset and when storing historical data. The data flash stores basic configuration information for use by the bq2083−V1P2. The data flash must be programmed correctly for proper bq2083−V1P2 operation.

Memory Map

Table 13 shows the memory map for the data flash. It shows the default programming for the bq2083−V1P2. The default programming reflects example data for a 3s2p Li-Ion battery pack with a 0.02-Ω sense resistor. The data flash must be reprogrammed to meet the requirements of individual applications.

Read

Reading the data flash is a two step process:

1. Using the SMBus write word protocol, use command code 0x51 and let the LSB data byte be the address of the flash location. The MSB data byte is set to 0.
2. Using the SMBus read word protocol, use command code 0x52 to retrieve the data.

Write

Using the SMBus write word protocol, use command code 0x50. Place the address of the flash location into the LS byte of the data word. Place the data to be written into the MS byte data word.

Table 13. Data Flash Memory Map

DATA FLASH ADDRESS		NAME	LI-ION EXAMPLE	DATA	
HIGH BYTE	LOW BYTE			MSB	LSB
0x00	0x01	*Remaining Time Alarm*	10 minutes	00	0a
0x02	0x03	*Remaining Capacity Alarm*	360 mAh	01	68
0x04	0x05	*Design Voltage*	10800 mV	2a	30
0x06	0x07	*Specification Information*	v1.1/PEC	00	31
0x08	0x09	*Manufacture Date*	2/15/02=11343	2c	4f
0x0a	0x0b	*Serial Number*	1	00	01
0x0c	0x0d	*Cycle Count*	0	00	00
0x0e		*Manufacturer Name Length*	11		0b
0x0f		Character 1	T		54
0x10		Character 2	e		45
0x11		Character 3	x		58
0x12		Character 4	a		41
0x13		Character 5	s		53
0x14		Character 6			20
0x15		Character 7	I		49
0x16		Character 8	n		4e
0x17		Character 9	s		53
0x18		Character 10	t		54
0x19		Character 11	.		2e
0x1a		*Device Name Length*	6		06
0x1b		Character 1	b		42
0x1c		Character 2	q		51
0x1d		Character 3	2		32
0x1e		Character 4	0		30
0x1f		Character 5	8		38
0x20		Character 6	3		33
0x21		Character 7	—		00
0x22		*Device Chemistry Length*	4		04
0x23		Character 1	L		4c
0x24		Character 2	I		49
0x25		Character 3	O		4f
0x26		Character 4	N		4e
0x27		*Manufacturer Data Length*	12		09
0x28		*Pack Configuration*	DMODE, LED1, CC1		c2
0x29		*Gauge Configuration*	CSYNC		40
0x2a		*Misc Configuration*	VOD		01
0x2b		*Digital Filter*	9860 nV		22
0x2c		*Self-Discharge Rate*	0.2%		14
0x2d		*Electronics Load*	0 mA		00
0x2e		*Battery Low %*	7.03%		12
0x2f	0x30	*Near Full*	200 mAh	00	c8

NOTE: Reserved locations must be set as shown. Locations marked with an * are typical calibration values that can be adjusted for maximum accuracy. For these locations the table shows the appropriate default or initial setting.

Table 13. Data Flash Memory Map (Continued)

DATA FLASH ADDRESS		NAME	LI-ION EXAMPLE	DATA	
HIGH BYTE	LOW BYTE			MSB	LSB
0x31	0x32	*Design Capacity*	3600 mAh	0e	10
0x33	0x34	Reserved	0	00	00
0x35	0x36	*Last Measured Discharge*	3600 mAh	0e	10
0x37	0x38	*Cycle Count Threshold*	2880 mAh	0b	40
0x39	0x3a	*Charging Voltage*	12600 mV	31	38
0x3b	0x3c	*Precharge Voltage*	8000 mV	1f	40
0x3d	0x3e	*Fast-Charging Current*	2500 mA	09	c4
0x3f	0x40	*Maintenance Charging Current*	0 mA	00	00
0x41	0x42	*Precharge Current*	100 mA	00	64
0x43		*Precharge Temp*	9.6°C		60
0x44		Reserved			1e
0x45		Reserved			00
0x46		*Fast Charge Termination %*	100%		ff
0x47		*Fully Charged Clear %*	95%		5f
0x48	0x49	*Current Taper Threshold*	240 mA	00	f0
0x4a	0x4b	*Current Taper Qual Voltage*	100 mV	00	64
0x4c		Reserved			28
0x4d		Reserved			40
0x4e	0x4f	*Maximum Overcharge*	300 mAh	01	2c
0x50		Reserved			02
0x51		*Charge Efficiency*	100%		ff
0x52		Reserved			64
0x53	0x54	*MaxTemperature*	54.6°C	02	22
0x55		*Temperature Hysteresis*	5°C		32
0x56	0x57	Reserved		01	ae
0x58	0x59	*Overload Current*	5000 mA	13	88
0x5a	0x5b	*Over Voltage Margin*	208 mV	00	d0
0x5c	0x5d	*Overcurrent Margin*	500 mA	01	f4
0x5e	0x5f	Reserved		01	00
0x60	0x61	*Cell Over Voltage*	4350 mV	10	fe
0x62	0x63	*Cell Under Voltage*	2300 mV	08	fc
0x64	0x65	*Terminate Voltage*	8500 mV	21	34
0x66	0x67	Reserved		00	00
0x68	0x69	*Safety Over Voltage*	20000 mV	4e	20
0x6a	0x6b	*Safety Over Temperature*	70°C	02	bc
0x6c		Reserved			ef
0x6d		Reserved			03
0x6e	0x6f	*VOC75*	11890 mV	2e	72
0x70		Reserved			bf
0x71		Reserved			56

NOTE: Reserved locations must be set as shown. Locations marked with an * are typical calibration values that can be adjusted for maximum accuracy. For these locations the table shows the appropriate default or initial setting.

Table 13. Data Flash Memory Map (Continued)

DATA FLASH ADDRESS		NAME	LI-ION EXAMPLE	DATA	
HIGH BYTE	LOW BYTE			MSB	LSB
0x72		Reserved			40
0x73	0x74	*VOC50*	11430 mV	2c	a6
0x75		Reserved			7f
0x76		Reserved			3d
0x77		Reserved			27
0x78	0x79	*VOC25*	11270 mV	2c	06
0x7a		Reserved			3f
0x7b		Reserved			24
0x7c		Reserved			0e
0x7c		Reserved			14
0x7e		Reserved			40
0x7f	0x80	Reserved		0b	e1
0x81	0x82	Reserved		0b	68
0x83		Reserved			19
0x84	0x85	*EMF/EDV0*	3000 mV	0b	b8
0x86	0x87	*EDV C0 Factor/EDV1*	3250 mV	0c	b2
0x88	0x89	*EDV R0 Factor/EDV2*	3400 mV	0d	48
0x8a	0x8b	*EDV T0 Factor*	0	00	00
0x8c	0x8d	*EDV R1 Factor*	0	00	00
0x8e		*EDV TC Factor*	0		00
0x8f		*EDV C1 Factor*	0		00
0x90		Reserved			08
0x91		Reserved			9b
0x92		Reserved			c7
0x93		Reserved			64
0x94		Reserved			14
0x95	0x96	Reserved		02	00
0x97	0x98	Reserved		01	00
0x99		Reserved			08
0x9a		Reserved			02
0x9b		*Learning Low Temp*	11.9°C		77
0x9c		Reserved			0a
0x9d	0x9e	Reserved		01	80
0x9f	0xa0	Reserved		01	00
0xa1		Reserved			08
0xa2		Reserved			18
0xa3		Reserved			14
0xa4	0xa5	TS Const 1		91	83
0xa6	0xa7	TS Const 2		51	70
0xa8	0xa9	TS Const 3		e2	8f
0xaa	0xab	TS Const 4		0f	ac

NOTE: Reserved locations must be set as shown. Locations marked with an * are typical calibration values that can be adjusted for maximum accuracy. For these locations the table shows the appropriate default or initial setting.

Table 13. Data Flash Memory Map (Continued)

DATA FLASH ADDRESS		NAME	LI-ION EXAMPLE	DATA	
HIGH BYTE	LOW BYTE			MSB	LSB
0xac	0xad	TS Const 5		00	00
0xae	0xaf	Reserved		0f	ac
0xb0		Reserved			32
0xb1		*AFE Brnout Shutdn*	Shutdown = 6.475, Brownout = 7.975 V		00
0xb2		*AFE Over Curr Dsg*	140 mV		12
0xb3		*AFE Over Curr Chg*	70 mV		04
0xb4		*AFE Over Curr Delay*	Charge = 31 ms, Discharge = 31 ms		ff
0xb5		Reserved			00
0xb6		*AFE Short Circ Thrsh*	275 mV		07
0xb7		*AFE Short Circuit Delay*	61 µs (charge and discharge)		11
0xb8	0xb9	*AFE Vref**	9750 mV	26	16
0xba	0xbb	*Sense Resistor Gain**	0.02 Ω	3b	d0
0xbc	0xbd	*CC Delta**	0.0001298 mAh	94	08
0xbe	0xbf	*CC Delta**		b1	c0
0xc0		Reserved			fa
0xc1	0xc2	*CC Offset**	1528	05	f8
0xc3		*DSC Offset**	15		10
0xc4		*ADC Offset**	16		11
0xc5		*Temperature Offset**	0		00
0xc6		*Board Offset**	0		00
0xc7	0xc8	Reserved		00	40
0xc9	0xca	Reserved		01	00
0xcb		Reserved			05
0xcc	0xcd	Version	1.2	01	20
0xce		Reserved		00	32
0xcf	0xd0	*Cell Over Voltage Reset*	4150 mV	10	36
0xd1	0xd2	*Cell Under Voltage Reset*	3000 mV	0b	b8
0xd3	0xd4	*AFE Fail Limit*	2 counts	00	02
0xd5	0xd6	Reserved		ff	ff
0xd7	0xd8	*Cell Balance Thresh*	3900 mV	0f	3c
0xd9	0xda	*Cell Balance Window*	100 mV	00	64
0xdb		*Cell Balance Min*	40 mV		28
0xdc		*Cell Balance Interval*	20 seconds		14
0xdd	0xde	Reserved		a5	5a
0xdf	0xd0	Reserved		7a	43
0xe1	0xe2	Reserved		20	83
0xe3		Reserved			00
0xe4		*AFE Check Time*	0 seconds		00
0xe5		*Sleep Current Thresh*	2 mA		04
0xe6		*Sleep Current Time*	20 seconds		14
0xe7		*Sleep Time*	100 seconds		64
0xe9		*Charger Detect Current*	2 mA		02

NOTE: Reserved locations must be set as shown. Locations marked with an * are typical calibration values that can be adjusted for maximum accuracy. For these locations the table shows the appropriate default or initial setting.

PROGRAMMING INFORMATION

DATA FLASH PROGRAMMING

The following sections describe the function of each data flash location and how the data is to be stored.

Fundamental Parameters

Sense Resistor Value

The 32-bit *CC Delta* DF 0xbc−0xbf corrects the coulomb counter for sense resistor variations. It represents the gain factor for the coulomb counter.

The 16-bit *Sense Resistor Gain* in DF 0xba-0xbb scales each integrating converter conversion to mAh. The Current( ) related measurement *Sense Resistor Gain* is based on the resistance of the series sense resistor. The following formula computes a nominal or starting value for *Sense Resistor Gain* from the sense resistor value.

$$\textit{Sense Resistor Gain} = \frac{306.25}{Rs} \quad (2)$$

Digital Filter

The desired digital filter threshold, VDF (V), is set by the value stored in *Digital Filter* DF 0x2b.

$$\textit{Digital Filter} = \frac{VDF}{290\ nV} \quad (3)$$

Cell and Pack Characteristics

Battery Pack Capacity and Voltage

Pack capacity in mAh units is stored in *Design Capacity*, DF 0x31−0x32. In mAh mode, the bq2083−V1P2 copies *Design Capacity* to DesignCapacity( ). In mWh mode, the bq2083−V1P2 multiplies *Design Capacity* by *Design Voltage* DF 0x04−0x05 to calculate DesignCapacity( ) scaled to 10 mWh. *Design Voltage* is stored in mV.

The initial value for *Last Measured Discharge*, in mAh, is stored in DF 0x35−0x36. *Last Measured Discharge* is modified over the course of pack usage to reflect cell aging under the particular use conditions. The bq2083−V1P2 updates *Last Measured Discharge* in mAh after a capacity learning cycle. The bq2083−V1P2 uses the *Last Measured Discharge* value to calculate FullChargeCapacity( ) in units of mAh or 10 mWh.

Remaining Time and Capacity Alarms

Remaining Time Alarm in DF 0x00-0x01 and *Remaining Capacity Alarm* in 0x02-0x03 set the alarm thresholds used in the SMBus command codes 0x01 and 0x02, respectively. *Remaining Time Alarm* is stored in minutes and *Remaining Capacity Alarm* in units of mAh or 10 mWh, depending on the BatteryMode( ) setting.

EDV Thresholds and Near Full Percentage

The bq2083−V1P2 uses three pack-voltage thresholds to provide voltage-based warnings of low battery capacity. The bq2083−V1P2 uses the values stored in data flash for the EDV0, EDV1, and EDV2 values or calculates the three thresholds from a base value and the temperature, capacity, and rate adjustment factors stored in data flash. If EDV compensation is disabled then EDV0, EDV1, and EDV2 are stored directly in mV in DF 0x84−0x85, DF 0x86−0x87, and DF 0x88−0x89, respectively.

For capacity correction at EDV2, *Battery Low %* DF 0x2e can be set at a desired state-of-charge, STATEOFCHARGE%, in the range of 3-19%. Typical values for STATEOFCHARGE% are 5-7%, representing 5-7% capacity.

$$\textit{Battery Low \%} = (\text{STATEOFCHARGE\%} \bullet 2.56) \quad (4)$$

The bq2083−V1P2 updates FCC if a qualified discharge occurs from a near-full threshold of FCC − *Near Full*, until EDV2 condition is reached. The desired near-full threshold window is programmed in *Near Full* in DF 0x2f, 0x30 in mAh.

EDV Discharge Rate and Temperature Compensation

If EDV compensation is enabled, the bq2083−V1P2 calculates battery voltage to determine EDV0, EDV1, and EDV2 thresholds as a function of battery capacity, temperature, and discharge load. The general equation for EDV0, EDV1, and EDV2 calculation is:

$$EDV0,1,2 = n (EMF \bullet FBL - | ILOAD | \bullet R0 \bullet FTZ) \quad (5)$$

EMF is a no-load cell voltage higher than the highest cell EDV threshold computed. EMF is programmed in mV in *EMF/EDV1* DF 0x84−0x85.

ILOAD is the current discharge load magnitude.
n = the number of series cells

FBL is the factor that adjusts the EDV voltage for battery capacity and temperature to match the no-load characteristics of the battery.

$$FBL = f (C0, C + C1, T) \quad (6)$$

C (either 0%, 3%, or *Battery Low %* for EDV0, EDV1, and EDV2, respectively) and C0 are the capacity- related EDV adjustment factors. C0 is programmed in *EDV C0 Factor/EDV1* DF 0x86−87. C1 is the desired residual battery capacity remaining at EDV0 (RM = 0). The C1 factor is stored in *EDV C1 Factor* DF 0x8f.

T is the current temperature in °K.

R0 • FTZ represents the resistance of a cell as a function of temperature and capacity.

$$FTZ = f (R1 , T0, T, C + C1, TC) \quad (7)$$

R0 is the first order rate dependency factor stored in *EDV R0 Factor/EDV2* DF 0x88−0x89.

T is the current temperature; C is the battery capacity relating to EDV0, EDV1, and EDV2.

R1 adjusts the variation of impedance with battery capacity. R1 is programmed in *EDV R1 Rate Factor* DF 0x8c-0x8d.

T0 adjusts the variation of impedance with battery temperature. T0 is programmed in *EDV T0 Rate Factor* DF 0x8a−0x8b.

TC adjusts the variation of impedance for cold temperatures (T < 23°C). TC is programmed in *EDV TC* DF 0x8e.

Typical values for the EDV compensation factors, based on overall pack voltages for a Li-Ion 3s2p 18650 pack, are

EMF = 11550/3
T0 = 4475
C0 = 235
C1 = 0
R0 = 5350/3
R1 = 250
TC = 3

The graphs in Figures 8 and 9 show the calculated EDV0, EDV1, and EDV2 thresholds versus capacity using the typical compensation values for different temperatures and loads for a Li-Ion 3s2p 18650 pack. The compensation values vary widely for different cell types and manufacturers and must be matched exactly to the unique characteristics for optimal performance.

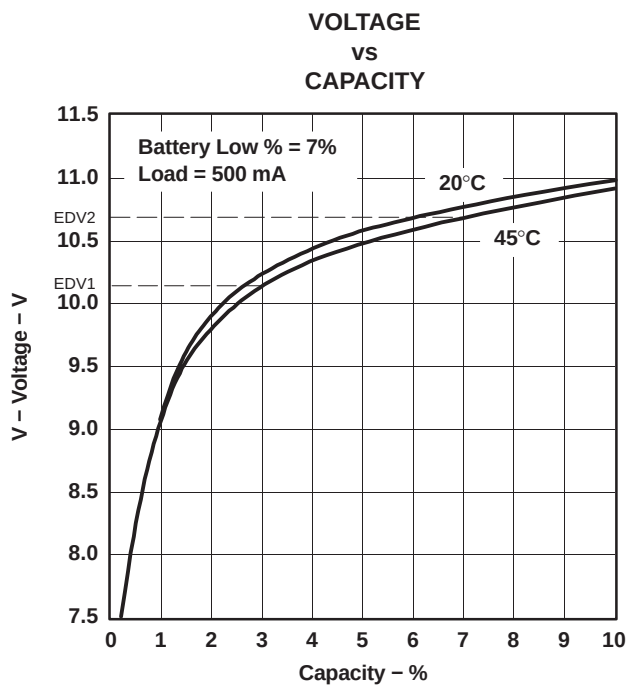

Figure 8. EDV Calculations vs Capacity for Various Temperatures

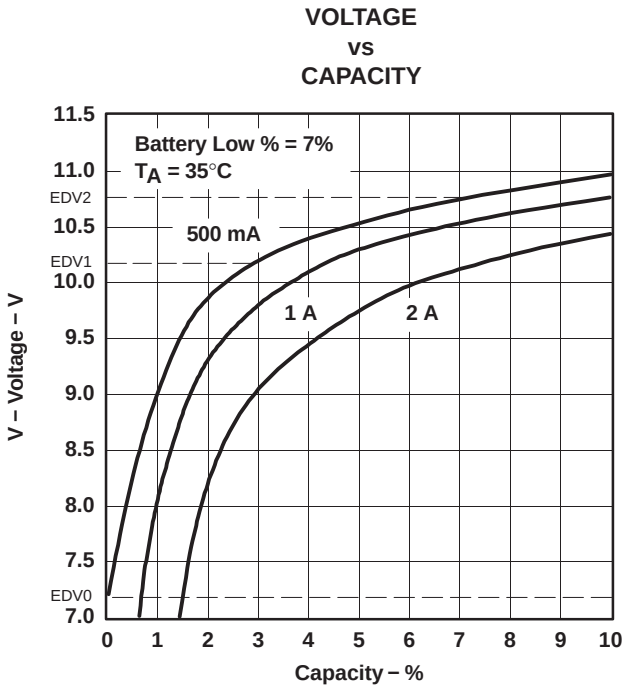

Figure 9. EDV Calculations vs Capacity for Various Loads

Overload Current Threshold

The overload protection disables discharge when the 16-bit limit programmed in DF 0x58−0x59 is breached. The threshold is stored in mA.

Midrange Capacity Corrections

Three voltage-based thresholds, *VOC25* DF 0x78−0x79, *VOC50* DF 0x73−0x74, and *VOC75* DF 0x6e−0x6f, are used to test the accuracy of the RM based on open-circuit pack voltages. These thresholds are stored in the data flash in mV. The values represent the open-circuit battery voltage at which the battery capacity should correspond to the associated state of charge for each threshold.

Self-Discharge Rate

The nominal self-discharge rate, %PERDAY (% per day), is programmed in an 8-bit value *Self-Discharge Rate* DF 0x2c by the following relation:

$$\textit{Self-Discharge Rate} = \frac{\%\text{PERDAY}}{0.01} \tag{8}$$

Charge Efficiency

The bq2083−V1P2 applies the efficiency factor, EFF%, to all charge added to the battery. EFF% is encoded in *Charge Efficiency* DF 0x51 according to equation 16:

$$\textit{Charge Efficiency} = (\text{EFF\%} \bullet 2.56 – 1) \tag{9}$$

Other Compensation

Battery Electronics Load

The amount of internal battery electronics load estimate in μA, BEL, is stored in *Electronics Load* DF 0x2d as follows:

$$\textit{Electronics Load} = \frac{\text{BEL}}{3}$$

Change Control

Charging Voltage

The 16-bit value, *Charging Voltage* DF 0x39−0x3a programs the ChargingVoltage( ) value broadcast to a smart charger. It ialso sets the base value for determining overvoltage conditions during charging and voltage compliance during a constant-voltage charging methodology. It is stored in mV.

Over Voltage

The 16-bit value, *Over Voltage Margin* DF 0x5a−0x5b, sets the limit over ChargingVoltage( ) in mV that is to be considered as an overvoltage charge-suspension condition.

Charging Current

ChargingCurrent( ) values are either broadcast to a Level 2 smart battery charger or read from the bq2083−V1P2 by a Level 3 smart battery charger. The bq2083−V1P2 sets the value of ChargingCurrent( ), depending on the charge requirements and charge conditions of the pack.

When fast charge is allowed, the bq2083−V1P2 sets ChargingCurrent( ) to the rate programmed in *Fast-Charging Current* DF 0x3d−0x3e. *Fast-Charging Current* is stored in mA.

When fast charge terminates, the bq2083−V1P2 sets ChargingCurrent( ) to zero and then to the *Maintenance Charging Current* DF 0x3f, 0x40 when the termination condition ceases. The desired maintenance current is stored in mA.

When Voltage( ) is less than EDV0, the bq2083−V1P2 sets ChargingCurrent( ) to *Precharge Current* DF 0x41, 0x42. Typically this rate is larger than the maintenance rate to charge a deeply depleted pack up to the point where it may be fast charged. The desired precharge rate is stored in mA.

If temperature is between 0° and the precharge threshold PC (°C), the bq2083−V1P2 sets ChargingCurrent( ) to *PreCharge Current.* The threshold is programmed in the *Precharge Temp* DF 0x43.

$$\textit{Precharge Temp} = \frac{\text{PC (°C)}}{0.1} \tag{10}$$

The bq2083−V1P2 also sets ChargingCurrent( ) to the precharge rate if Voltage( ) is less than the value programmed in *Precharge Voltage* DF 0x3b−0x3c. *Precharge Voltage* is programmed in mV.

Charge Suspension

During charge, the bq2083−V1P2 compares the current to the ChargingCurrent( ) plus the value in *OverCurrent Margin* DF 0x5c−0x5d. If the pack is charged at a current above or equal to the ChargingCurrent( ) plus the programmed value, the bq2083−V1P2 sets ChargingCurrent( ) to zero to stop charging.

The desired *Overcurrent Margin* is programmed in mA.

The desired temperature threshold for charge suspension, MAXTEMP (°C), is programmed in *Max Temperature* DF 0x53, 0x54 and is stored as shown:

$$\textit{Max Temperature} = \frac{\text{MAXTEMP}}{0.1} \tag{11}$$

The bq2083−V1P2 clears the maximum temperature condition when Temperature( ) drops by the amount programmed in *Temperature Hysteresis* DF 0x55 from MAXTEMP or when the temperature is less than or equal to 43.0°C. *Temperature Hysteresis* is stored in °C.

The bq2083−V1P2 suspends fast charge when fast charge continues past full by the amount programmed in *Maximum Overcharge* DF 0x4e-0x4f. *Maximum Overcharge* is programmed in mAh.

FULLY_CHARGED Bit Clear Threshold

The bq2083−V1P2 clears the FULLY_CHARGED bit in BatteryStatus( ) when RelativeStateOfCharge( ) reaches the value, *Fully Charged Clear %* DF 0x47. *Fully Charged Clear %* is an 8-bit value and is stored in percent.

Fast Charge Termination Percentage

The bq2083−V1P2 sets RM to a percentage of FCC on charge termination if the CSYNC bit is set in the gauge configuration register. The percentage of FCC, FCT%, is stored in *Fast Charge Termination %* in DF 0x46. The value is stored as shown:

Fast Charge Termination% = (FCT% * 2.56−1)

Cycle Count Initialization

Cycle Count DF 0x0c-0x0d stores the initial value for the CycleCount( ) function. It should be programmed to 0x0000.

Cycle Count Threshold

Cycle Count Threshold 0x37−0x38 sets the number of mAh that must be removed from the battery to increment CycleCount( ). Cycle Count threshold is a 16-bit value stored in mAh.

Current Taper Termination Characteristics

Two factors in the data flash set the current taper termination for Li-Ion battery packs. The two locations are *Current Taper Qual Voltage* DF 0x4a and *Current Taper Threshold* DF 0x48−0x49. Current taper termination occurs during charging when the pack voltage is above or equal to the charging voltage minus the qualification voltage, and the charging current is below the taper threshold for at least 40 seconds. *Current Taper Qual Voltage* DF 0x4a is stored in mV and *Current Taper Threshold* DF 0x48−0x49 in mA.

Cell Balancing

Four constants set the cell balancing parameters. *Cell Balance Threshold* DF 0xd9−0xda sets the minimum voltage in mV that each cell must achieve to initiate cell balancing. *Cell Balance Window* DF 0xd9−0xda sets in mV the amount that the cell balance threshold can increase. *Cell Balance Min* DF 0xdb sets in mV the cell differential that must exist to initiate cell balancing and *Cell Balance Interval* DF 0xdc sets the cell balancing time interval in seconds. Programming *Cell Balance Threshold* to 65,535 disables cell balancing.

Pack Options

Pack Configuration

Pack Configuration DF 0x28 contains bit-programmable features.

b7	b6	b5	b4	b3	b2	b1	b0
DMODE	LED1	LED0	HPE	CPE	SM	CC1	CC0

DMODE

The DMODE bit determines whether the LED outputs indicate AbsoluteStateOfCharge( ) or RelativeStateOfCharge( ).

0 LEDs reflect AbsoluteStateOfCharge( )

1 LEDs reflect RelativeStateOfCharge( )

LED1−LED0

The LED bits set the number of LEDs for Remaining Capacity ( ) indication.

0−1 Configures the bq2083−V1P2 for three LEDs

1−0 Configures the bq2083−V1P2 for four LEDs

1−1 or 0−0 Configures the bq2083−V1P2 for five LEDs

HPE

The hpe bit enables/disables PEC transmissions to the smart battery host for master mode alarm messages.

0 No PEC byte on alarm warning to host

1 PEC byte on alarm warning to host

CPE

The CPE bit enables/disables PEC transmissions to the smart battery charger for master mode messages.

0 No PEC byte on broadcasts to charger

1 PEC byte on broadcasts to charger

SM

The SM bit enables/disables master mode broadcasts by the bq2083−V1P2.

0 Broadcasts to host and charger enabled

1 Broadcasts to host and charger disabled

If the SM bit is set, modifications to bits in BatteryMode( ) do not re-enable broadcasts.

CC1−CC0

The CC bits configure the bq2083−V1P2 for the number of series cells in the battery pack.

1−1 Configures the bq2083−V1P2 for four series cells

1−0 Configures the bq2083−V1P2 for three series cells

Gauge Configuration

Gauge Configuration DF 0x29 contains bit programmable features:

b7	b6	b5	b4	b3	b2	b1	b0
0	CSYNC	SC	CEDV	EDVV	OVSEL	VCOR	OTVC

CSYNC

In usual operation of the bq2083−V1P2, the CSYNC bit is set so that the coulomb counter is adjusted when a fast charge termination is detected. In some applications, especially those where an externally controlled charger is used, it may be desirable *not* to adjust the coulomb counter. In these cases the CSYNC bit should be cleared.

0 The bq2083−V1P2 does not alter RM at the time of a valid charge termination.

1 The bq2083−V1P2 updates RM with a programmed percentage of FCC at a valid charger termination.

SC

The SC bit enables learning cycle optimization for a Smart Charger or independent charge.

1 Learning cycle optimized for independent charger

0 Learning cycle optimized for Smart Charger

CEDV

The CEDV bit determines whether the bq2083−V1P2 implements automatic EDV compensation to calculate the EDV0, EDV1, and EDV2 thresholds base on rate, temperature, and capacity. If the bit is cleared, the bq2083−V1P2 uses the fixed values programmed in data flash for EDV0, EDV1, and EDV2. If the bit is set, the bq2083−V1P2 calculates EDV0, EDV1, and EDV2.

0 EDV compensation disabled

1 EDV compensation enabled

EDVV

The EDVV bit selects whether EDV termination is to be done with regard to voltage or the lowest single-cell voltage.

0 EDV conditions determined on the basis of the lowest single-cell voltage

1 EDV conditions determined on the basis of Voltage( )

OVSEL

The OVSEL bit determines if safety over voltage is based on pack or highest cell voltages.

0 Safety over voltage based on pack voltage

1 Safety over voltage based on highest cell voltage multiplied by the number of cells and then compared to the safety voltage

VCOR

The VCOR bit enables the midrange voltage correction algorithm. When it is set, the bq2083−V1P2 compares the pack voltage to RM and may adjust RM according to the values programmed in VOC25, VOC50, and VOC75.

0 Continuous midrange corrections disabled

1 Continuous midrange corrections enabled

OTVC

The OTVC bit programs the bq2083−V1P2 to perform a midrange voltage one time after a device reset.

0 One-time midrange correction disabled
1 One-time midrange correction enabled

Safety Control

Secondary Protection Limits for Li-Ion

The cell undervoltage (VUV) and overvoltage (VOV) limits are programmed in *Cell Under and Cell Over Voltage* DF 0x62−0x63, DF 0x60−0x61, respectively. Both values are stored in mV. *Cell Over Voltage Reset* DF 0xef and *Cell Under Voltage Reset* 0xd1−0xd2 set the reset points in mV for these safety parameters.

$\overline{\text{SAFE}}$ Threshold

The safety voltage threshold is programmed in *Safety Over Voltage* DF 0x68−0x69. It is stored in mV.

If Guage Configuration bit 2 (OVSEL) = 0 then Safety Over Voltage is based on pack voltage, but if OVSEL = 1, then it is based on highest cell voltage.

The safety overtemperature (SOT) in °C is programmed in *Safety Over Temperature* DF 0x6a−0x6b. It is stored as

$$SafetyOvertemperature = \frac{SOT}{0.1} \quad (12)$$

AFE CONFIGURATION

The AFE protection limits are programmed as specified in the bq29311 data sheet.

AFE Brnout/Shutdn 0xb1 sets the brownout and shutdown voltage levels

AFE Over Curr Dsg DF 0xb2 sets the overcurrent threshold on discharge.

AFE Over Curr Chg DF 0xb3 sets the overcurrent threshold on charge.

AFE Over Curr Delay DF 0xb4 sets the delay timing for over current in the charge and discharge direction.

AFE Short Circ Thresh DF 0xb6 sets the short circuit threshold.

AFE Short Circuit Delay DF 0xb7 sets the short circuit delay time.

AFE INTEGRITY CHECK

AFE Check time DF 0xe4 sets the period in seconds for the AFE integrity check.

An *AFE Fail Limit* of 65,535 is the number of AFE integrity check failures that occur before the AFC flag is set.

SLEEP MODE

The sleep current threshold, SLP (mA), is stored in *Sleep Current Thresh* DF 0xe5 as:

$$Sleep\ Current\ Thresh = \frac{SLP(mA)}{0.5} \quad (13)$$

The wake-up period for current measurement, WAT(s), is set in *Sleep Current Time* DF 0xe6 as:

$$Sleep\ Current\ Time = \frac{WAT(s)}{0.5} \quad (14)$$

Miscellaneous Configuration

Misc Configuration DF 0x2a contains additional bit programmable features.

b7	b6	b5	b4	b3	b2	b1	b0
IT	0	AC	DS	OT	ECLED	PHG	VOD

IT

The IT bit configures the bq2083−V1P2 to use its internal temperature sensor.

0 bq2083−V1P2 requires an external thermistor.

1 bq2083−V1P2 uses its internal temperature sensor.

AC

The AC bit enables the $\overline{\text{SAFE}}$ output to function based on the AFE integrity check.

0 $\overline{\text{SAFE}}$ not activated based on the AFE integrity check.

1 $\overline{\text{SAFE}}$ activated based on the AFE integrity check.

DS

The DS bit programs the bq2083−V1P2 to enter sleep mode on SMBus inactivity.

0 bq2083−V1P2 enters sleep mode when the SMBus is low for 2 s.

1 bq2083−V1P2 does not enter sleep mode.

OT

The OT bit programs the bq2083−V1P2 to turn off the discharge FET when the bq2083−V1P2 detects an overtemperature condition. Charge FET is always turned off in overtemperature conditions.

0 bq2083−V1P2 does not turn off the discharge FET on overtemperature.

1 bq2083−V1P2 turns off the discharge FET on overtemperature.

ECLED

The ECLED bit programs the LED activity during charging (DSG bit = 0).

0 The LEDs are not enabled during charging.

1 The LEDs are enabled during charging.

PHG

The PHG bit configures the bq2083−V1P2 to control a precharge FET.

0 The bq2083−V1P2 does not control a precharge FET.

1 The bq2083−V1P2 may turn on or off a precharge FET according to the programmed precharge conditions.

VOD

The VOD bit enables a 1-second time delay on the charge and discharge FET control.

0 No delay

1 1-second delay

CONSTANTS AND STRING DATA

Specification Information

Specification Information DF 0x06−0x07 stores the default value for the SpecificationInfo( ) function. It is stored in data flash in the same format as the data returned by the SpecificationInfo( ).

Manufacture Date

Manufacture Date DF 0x08−0x09 stores the default value for the ManufactureDate( ) function. It is stored in data flash in the same format as the data returned by the ManufactureDate( ).

Serial Number

Serial Number DF 0x0a−0x0b stores the default value for the SerialNumber( ) function. It is stored in data flash in the same format as the data returned by the SerialNumber( ).

Manufacturer Name Data

Manufacturer Name Length DF 0x0e stores the length of the desired string that is returned by the ManufacturerName( ) function. Locations DF 0x0f−0x19 store the characters for ManufacturerName( ) in ASCII code.

Device Name Data

Device Name Length DF 0x1a stores the length of the desired string that is returned by the DeviceName( ) function. Locations DF 0x1b−0x21 store the characters for DeviceName( ) in ASCII code.

Device Chemistry Data

Device Chemistry Length DF 0x22 stores the length of the desired string that is returned by the DeviceChemistry( ) function. Locations DF 0x23−0x26 store the characters for DeviceChemistry( ) in ASCII code.

Manufacturers Data Length

Manufacturers Data Length DF 0x27 stores the length of the desired number of bytes that is returned by the ManufacturersData( ) function. It should be set to 9.

APPLICATION INFORMATION

The schematic shows a typical bq2083−V1P2-based battery pack application. The circuit consists of the bq29311 analog front end (AFE) IC, LED display, temperature measurement network, data flash connections, serial port, and the sense resistor. The data flash stores basic battery pack configuration information and measurement calibration values. The data flash must be programmed properly for bq2083−V1P2 operation. Table 13 shows the data flash memory map and outlines the programmable functions available in the bq2083−V1P2.

APPLICATION INFORMATION

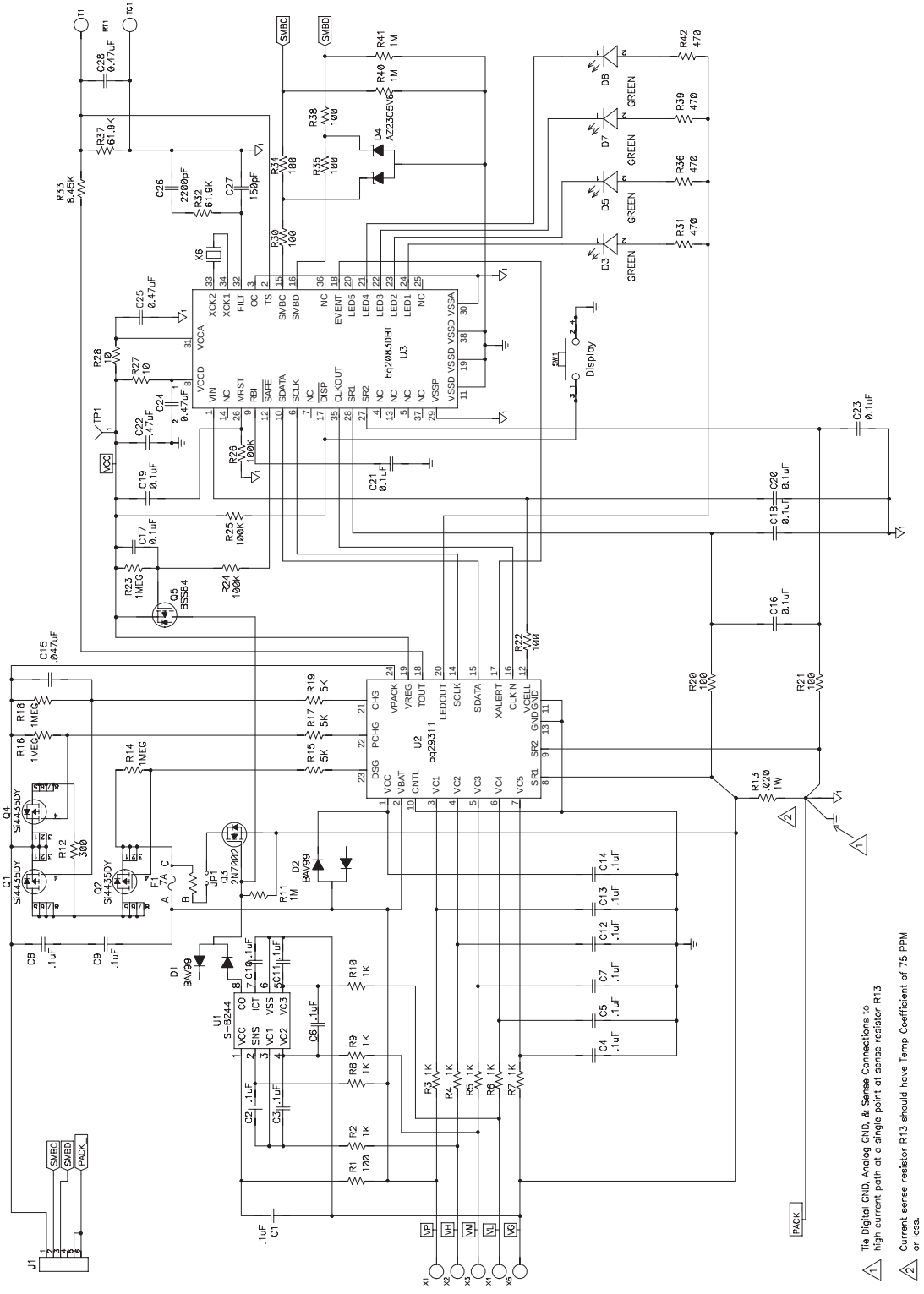

Figure 10. Typical bq2083−V1P2 Implementation

PACKAGING INFORMATION

Orderable Device	Status (1)	Package Type	Package Drawing	Pins	Package Qty	Eco Plan (2)	Lead/Ball Finish	MSL Peak Temp (3)
BQ2083DBT	ACTIVE	SM8	DBT	38	50	Green (RoHS & no Sb/Br)	CU NIPDAU	Level-2-260C-1 YEAR
BQ2083DBT-V1P2	PREVIEW	SM8	DBT	38	50	TBD	Call TI	Call TI
BQ2083DBTG4	ACTIVE	SM8	DBT	38	50	Green (RoHS & no Sb/Br)	CU NIPDAU	Level-2-260C-1 YEAR
BQ2083DBTR	ACTIVE	SM8	DBT	38	2000	Green (RoHS & no Sb/Br)	CU NIPDAU	Level-2-260C-1 YEAR
BQ2083DBTR-V1P2	ACTIVE	SM8	DBT	38	2000	Green (RoHS & no Sb/Br)	CU NIPDAU	Level-2-260C-1 YEAR
BQ2083DBTR-V1P2G4	ACTIVE	SM8	DBT	38	2000	Green (RoHS & no Sb/Br)	CU NIPDAU	Level-2-260C-1 YEAR
BQ2083DBTRG4	ACTIVE	SM8	DBT	38	2000	Green (RoHS & no Sb/Br)	CU NIPDAU	Level-2-260C-1 YEAR

(1) The marketing status values are defined as follows:
ACTIVE: Product device recommended for new designs.
LIFEBUY: TI has announced that the device will be discontinued, and a lifetime-buy period is in effect.
NRND: Not recommended for new designs. Device is in production to support existing customers, but TI does not recommend using this part in a new design.
PREVIEW: Device has been announced but is not in production. Samples may or may not be available.
OBSOLETE: TI has discontinued the production of the device.

(2) Eco Plan - The planned eco-friendly classification: Pb-Free (RoHS), Pb-Free (RoHS Exempt), or Green (RoHS & no Sb/Br) - please check http://www.ti.com/productcontent for the latest availability information and additional product content details.
TBD: The Pb-Free/Green conversion plan has not been defined.
Pb-Free (RoHS): TI's terms "Lead-Free" or "Pb-Free" mean semiconductor products that are compatible with the current RoHS requirements for all 6 substances, including the requirement that lead not exceed 0.1% by weight in homogeneous materials. Where designed to be soldered at high temperatures, TI Pb-Free products are suitable for use in specified lead-free processes.
Pb-Free (RoHS Exempt): This component has a RoHS exemption for either 1) lead-based flip-chip solder bumps used between the die and package, or 2) lead-based die adhesive used between the die and leadframe. The component is otherwise considered Pb-Free (RoHS compatible) as defined above.
Green (RoHS & no Sb/Br): TI defines "Green" to mean Pb-Free (RoHS compatible), and free of Bromine (Br) and Antimony (Sb) based flame retardants (Br or Sb do not exceed 0.1% by weight in homogeneous material)

(3) MSL, Peak Temp. -- The Moisture Sensitivity Level rating according to the JEDEC industry standard classifications, and peak solder temperature.

Important Information and Disclaimer: The information provided on this page represents TI's knowledge and belief as of the date that it is provided. TI bases its knowledge and belief on information provided by third parties, and makes no representation or warranty as to the accuracy of such information. Efforts are underway to better integrate information from third parties. TI has taken and continues to take reasonable steps to provide representative and accurate information but may not have conducted destructive testing or chemical analysis on incoming materials and chemicals. TI and TI suppliers consider certain information to be proprietary, and thus CAS numbers and other limited information may not be available for release.

In no event shall TI's liability arising out of such information exceed the total purchase price of the TI part(s) at issue in this document sold by TI to Customer on an annual basis.

DBT (R–PDSO–G**) PLASTIC SMALL–OUTLINE PACKAGE

30 PINS SHOWN

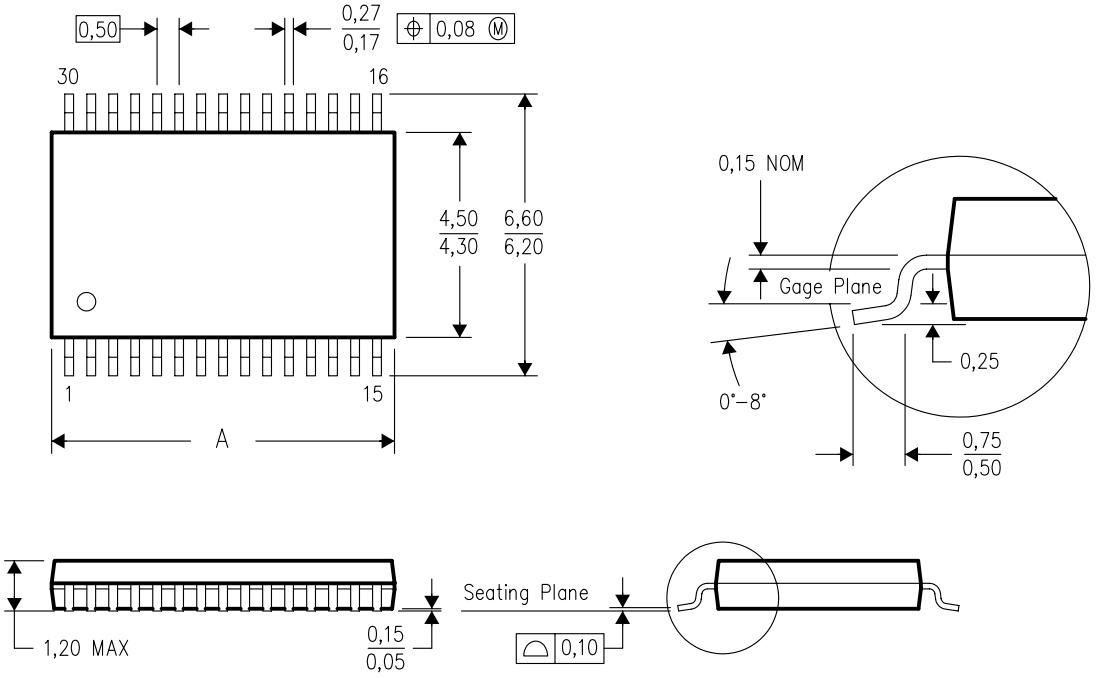

DIM \ PINS **	20	24	28	30	38	44	50
A MAX	5,10	6,60	7,90	7,90	9,80	11,40	12,60
A MIN	4,90	6,40	7,70	7,70	9,60	11,20	12,40

4073252/F 09/05

NOTES:
A. All linear dimensions are in millimeters.
B. This drawing is subject to change without notice.
C. Body dimensions do not include mold flash or protrusion.
D. Falls within JEDEC MO–153 except 44 pin package length.

IMPORTANT NOTICE

Texas Instruments Incorporated and its subsidiaries (TI) reserve the right to make corrections, modifications, enhancements, improvements, and other changes to its products and services at any time and to discontinue any product or service without notice. Customers should obtain the latest relevant information before placing orders and should verify that such information is current and complete. All products are sold subject to TI's terms and conditions of sale supplied at the time of order acknowledgment.

TI warrants performance of its hardware products to the specifications applicable at the time of sale in accordance with TI's standard warranty. Testing and other quality control techniques are used to the extent TI deems necessary to support this warranty. Except where mandated by government requirements, testing of all parameters of each product is not necessarily performed.

TI assumes no liability for applications assistance or customer product design. Customers are responsible for their products and applications using TI components. To minimize the risks associated with customer products and applications, customers should provide adequate design and operating safeguards.

TI does not warrant or represent that any license, either express or implied, is granted under any TI patent right, copyright, mask work right, or other TI intellectual property right relating to any combination, machine, or process in which TI products or services are used. Information published by TI regarding third-party products or services does not constitute a license from TI to use such products or services or a warranty or endorsement thereof. Use of such information may require a license from a third party under the patents or other intellectual property of the third party, or a license from TI under the patents or other intellectual property of TI.

Reproduction of TI information in TI data books or data sheets is permissible only if reproduction is without alteration and is accompanied by all associated warranties, conditions, limitations, and notices. Reproduction of this information with alteration is an unfair and deceptive business practice. TI is not responsible or liable for such altered documentation. Information of third parties may be subject to additional restrictions.

Resale of TI products or services with statements different from or beyond the parameters stated by TI for that product or service voids all express and any implied warranties for the associated TI product or service and is an unfair and deceptive business practice. TI is not responsible or liable for any such statements.

TI products are not authorized for use in safety-critical applications (such as life support) where a failure of the TI product would reasonably be expected to cause severe personal injury or death, unless officers of the parties have executed an agreement specifically governing such use. Buyers represent that they have all necessary expertise in the safety and regulatory ramifications of their applications, and acknowledge and agree that they are solely responsible for all legal, regulatory and safety-related requirements concerning their products and any use of TI products in such safety-critical applications, notwithstanding any applications-related information or support that may be provided by TI. Further, Buyers must fully indemnify TI and its representatives against any damages arising out of the use of TI products in such safety-critical applications.

TI products are neither designed nor intended for use in military/aerospace applications or environments unless the TI products are specifically designated by TI as military-grade or "enhanced plastic." Only products designated by TI as military-grade meet military specifications. Buyers acknowledge and agree that any such use of TI products which TI has not designated as military-grade is solely at the Buyer's risk, and that they are solely responsible for compliance with all legal and regulatory requirements in connection with such use.

TI products are neither designed nor intended for use in automotive applications or environments unless the specific TI products are designated by TI as compliant with ISO/TS 16949 requirements. Buyers acknowledge and agree that, if they use any non-designated products in automotive applications, TI will not be responsible for any failure to meet such requirements.

Following are URLs where you can obtain information on other Texas Instruments products and application solutions:

Products		**Applications**	
Amplifiers	amplifier.ti.com	Audio	www.ti.com/audio
Data Converters	dataconverter.ti.com	Automotive	www.ti.com/automotive
DSP	dsp.ti.com	Broadband	www.ti.com/broadband
Clocks and Timers	www.ti.com/clocks	Digital Control	www.ti.com/digitalcontrol
Interface	interface.ti.com	Medical	www.ti.com/medical
Logic	logic.ti.com	Military	www.ti.com/military
Power Mgmt	power.ti.com	Optical Networking	www.ti.com/opticalnetwork
Microcontrollers	microcontroller.ti.com	Security	www.ti.com/security
RFID	www.ti-rfid.com	Telephony	www.ti.com/telephony
RF/IF and ZigBee® Solutions	www.ti.com/lprf	Video & Imaging	www.ti.com/video
		Wireless	www.ti.com/wireless

Mailing Address: Texas Instruments, Post Office Box 655303, Dallas, Texas 75265
Copyright 2008, Texas Instruments Incorporated